STATE	PROJECT NO.	YEAR	SHEET NO.	TOTAL SHEETS
KANSAS	472-84071	2005	W4.19	

DATE	BY

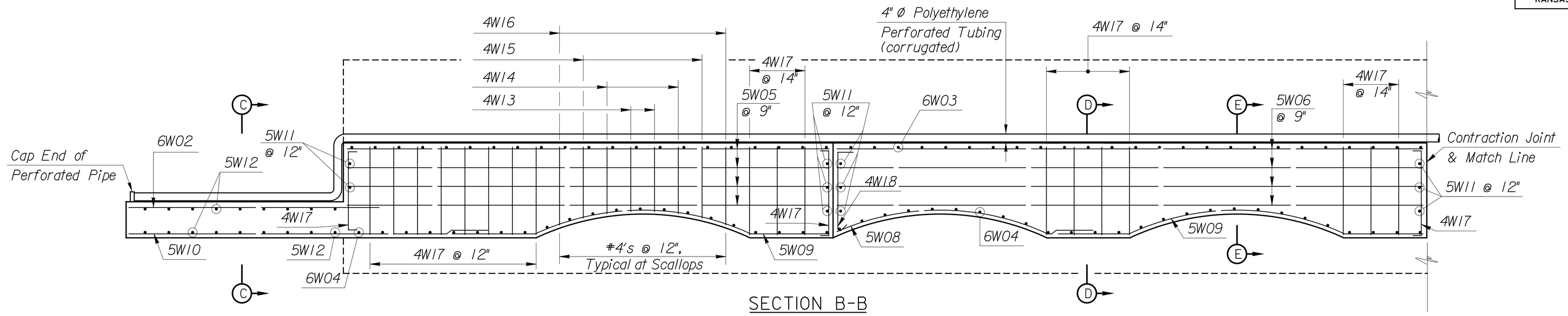

SECTION B-B

Scale: 3/8"=1'-0"

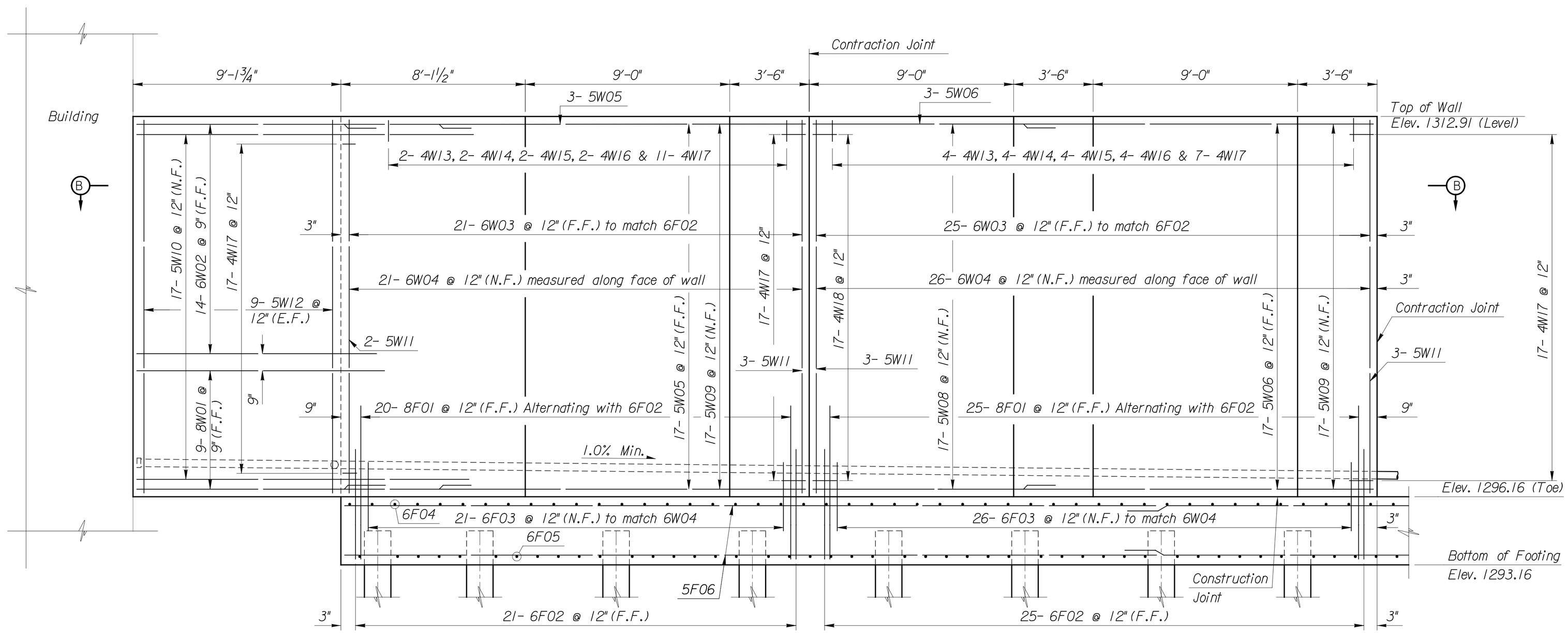

ELEVATION

Scale: 3/8"=1'-0"

Notes:

E.F. denotes each face
F.F. denotes far face
N.F. denotes near face
For Sections C-C, D-D, and E-E see Sheet W4.22.
For Strip Drain and Perforated Pipe details see Sheet W4.22.

Plotted on: Tuesday January 04,2005 09:18 AM
MHayes Plot Queue: \\cbsw100\KC029049-PS
Plot Scale: 0.083333L000000 Pen Table: \\corpw00\Jobs\29049\Bridge\Cadd\Library\Ipletpen\Fullsize.pen
Design Filename: \\corpw00\Jobs\29049\Bridge\Cadd\Details\ist_st_SE.plan.&.Elev.(East).dgn

This sheet designed by:

HNTB
ARCHITECTS ENGINEERS PLANNERS

NO.	DATE	REVISIONS	BY	APP'D
2				
1				

CITY OF WICHITA

WICHITA CENTRAL CORRIDOR

IST STREET WALL (SE)
ELEVATION VIEW - EAST PART

SHEET NO.	OF	SCALE		APP'D			
DESIGNED	AIS	DETAILED	AIS	QUANTITIES		TRACED	
DESIGN CK.	CAP	DETAIL CK.	CAP	QUAN.CK.		TRACE CK.	