STATE	PROJECT NO.	YEAR	SHEET NO.	TOTAL SHEETS
KANSAS	472-84071	2005	BL3.19	

DATE	BY

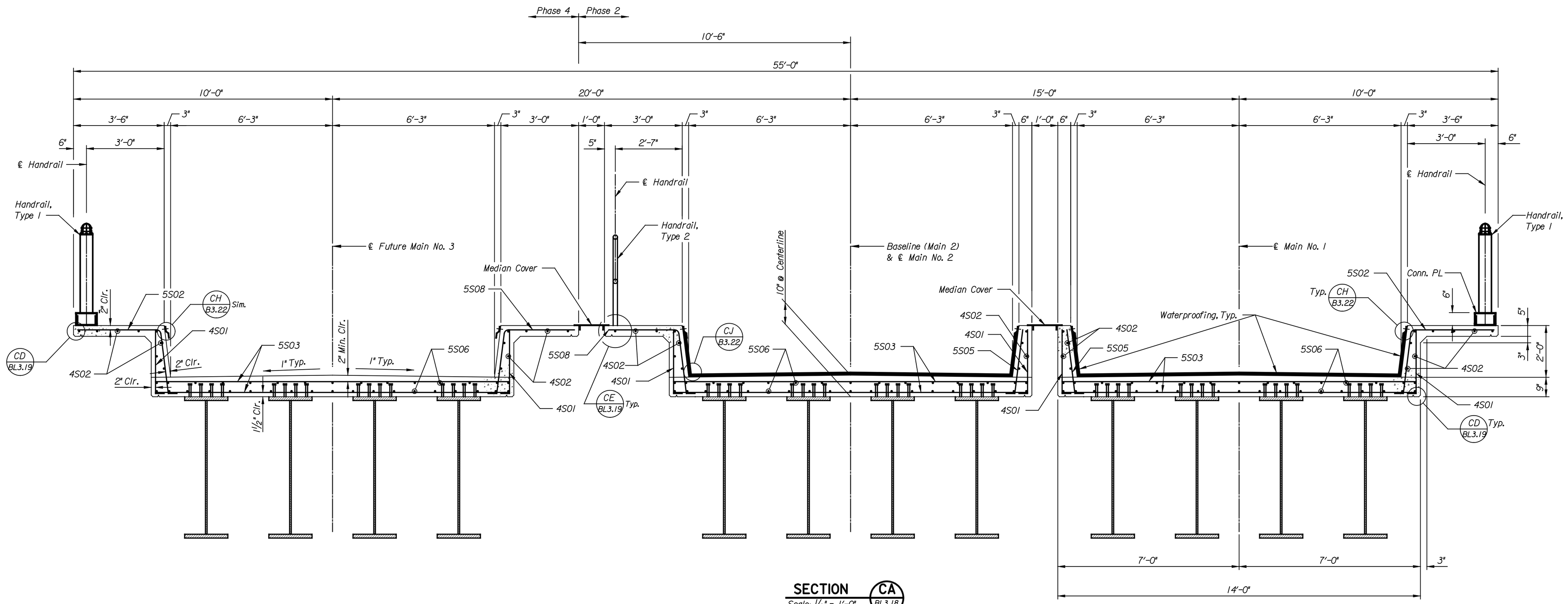

SECTION CA BL3.18
Scale: ½" = 1'-0"

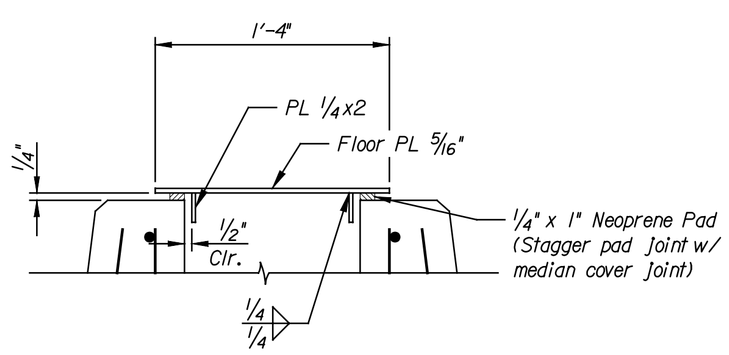

SECTION CB BL3.18
Scale: 1½" = 1'-0"

Note:
Minimum Length of Median Cover Plate, 5'-0"
Maximum Length of Median Cover Plate, 8'-0"

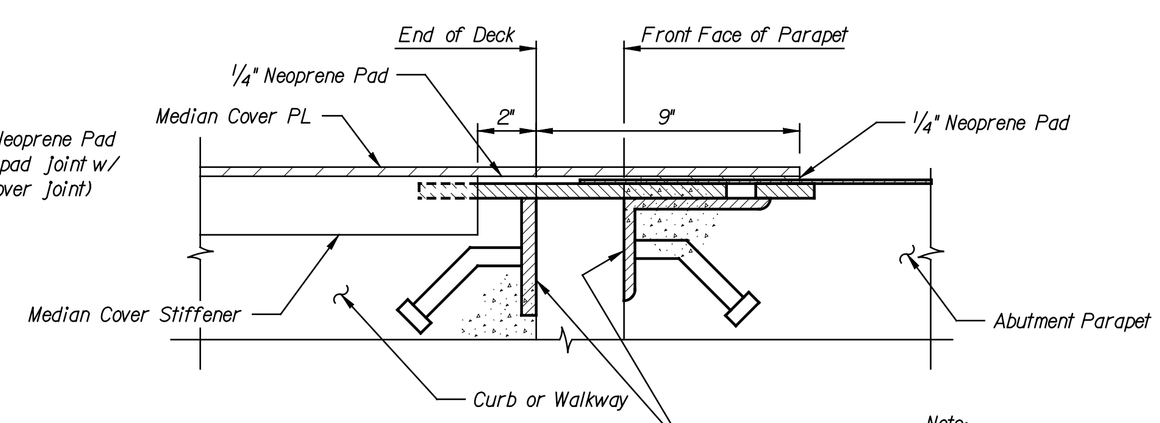

SECTION CC BL3.18
Scale: 3" = 1'-0"

Note:
Neoprene Pad is subsidiary to deck.

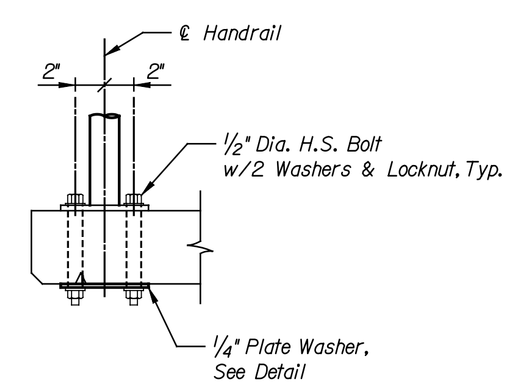

DETAIL CE BL3.19
Scale: 1½" = 1'-0"

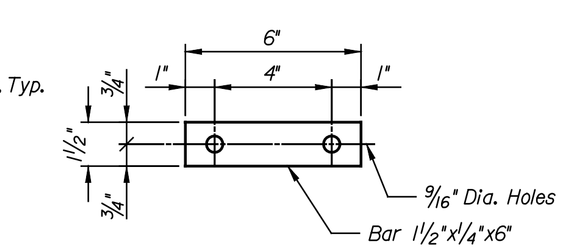

PLATE WASHER DETAIL
Scale: 3" = 1'-0"
Galvanize After Fabrication

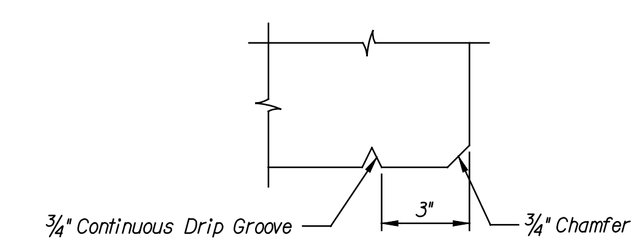

DETAIL CD BL3.19
Scale: 3" = 1'-0"

NO.	DATE	REVISIONS	BY	APP'D
3				
2				
1				

CITY OF WICHITA

WICHITA CENTRAL CORRIDOR
ALTERNATE 5
MURDOCK
DECK SECTION & DETAILS

SHEET NO.	OF	SCALE AS NOTED	APP'D		
DESIGNED	CAP	DETAILED	DJJ	QUANTITIES	DJJ	TRACED	DJJ
DESIGN CK.	SAS	DETAIL CK.	JWH	QUAN.CK.	DMH	TRACE CK.	DMH

LOCATION:
BNSF BR. 2IL5
WICHITA, KS
LINE SEGMENT 7400

This sheet designed by:

HNTB
ARCHITECTS ENGINEERS PLANNERS

Plotted on: 04-JAN-2005 12:02 $time$
scindrell Plot Queue: $queue$
Plot Scale: $scale$ Pen Table: $pentable$
Design Filename: k:\b28049\bridges\bc200\Bollard Lighting Alternate\murdock\drawings\mi8.dgn