STATE	PROJECT NO.	YEAR	SHEET NO.	TOTAL SHEETS
KANSAS	472-84071	2005	DA1.10	

NO.	DATE	BY

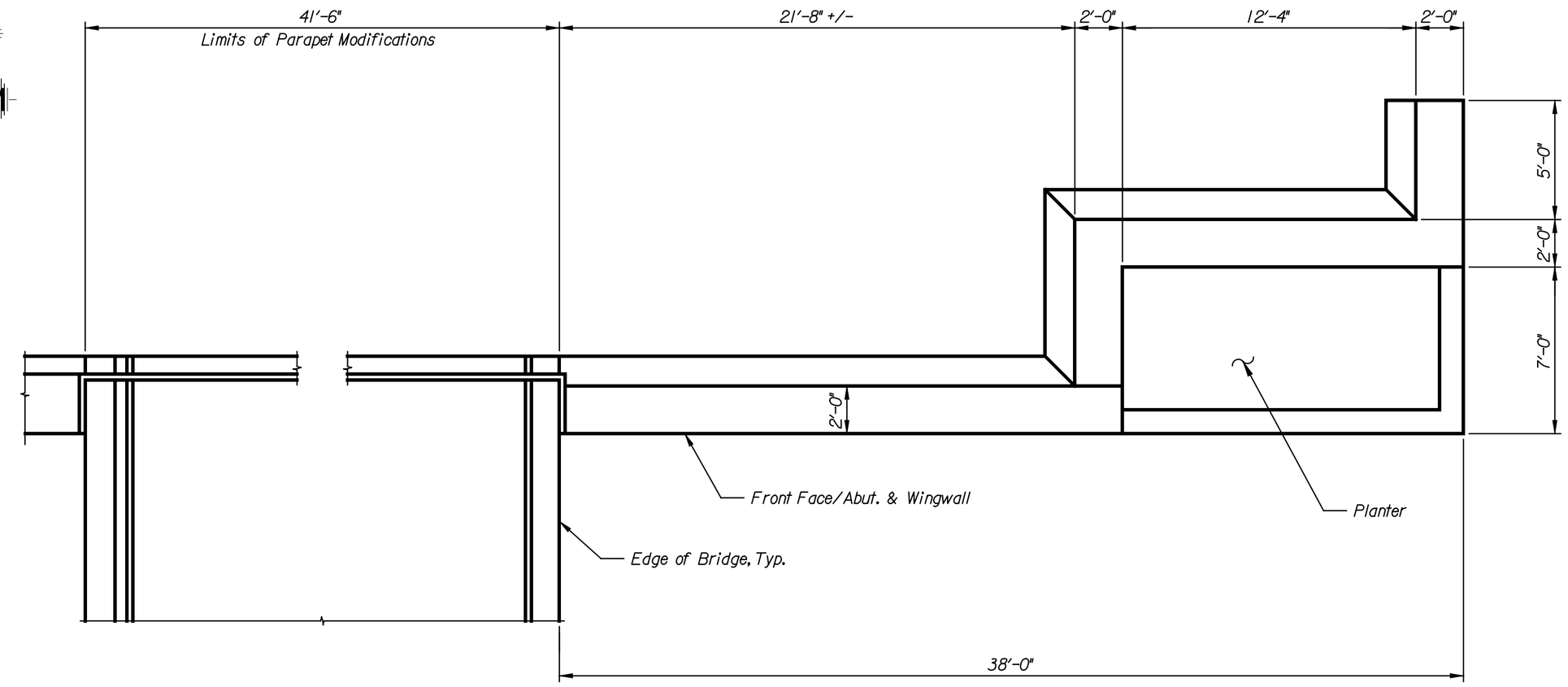

PLAN G / DA1.8
Scale: 1/4" = 1'-0"

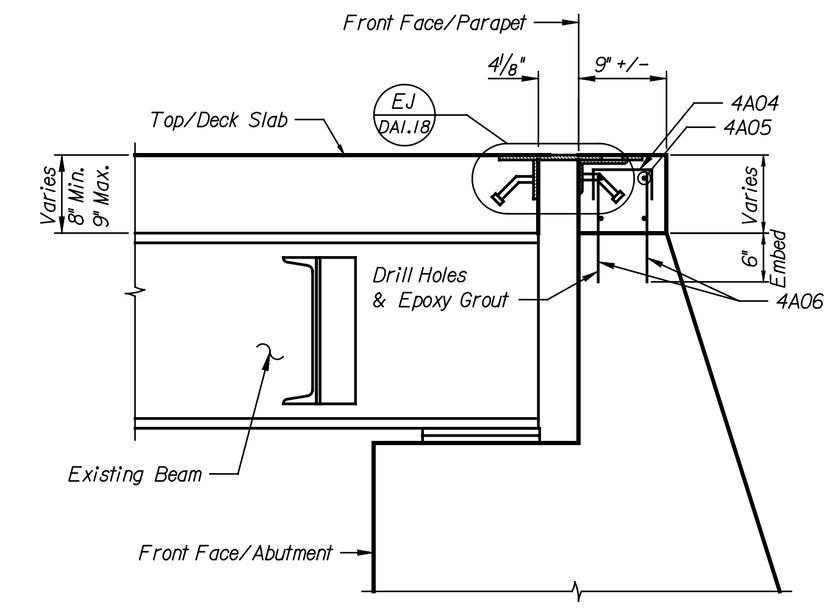

Note:
For limits of backwall modifications, see sheet B8.8.

SECTION E / DA1.8
Scale: 1" = 1'-0"

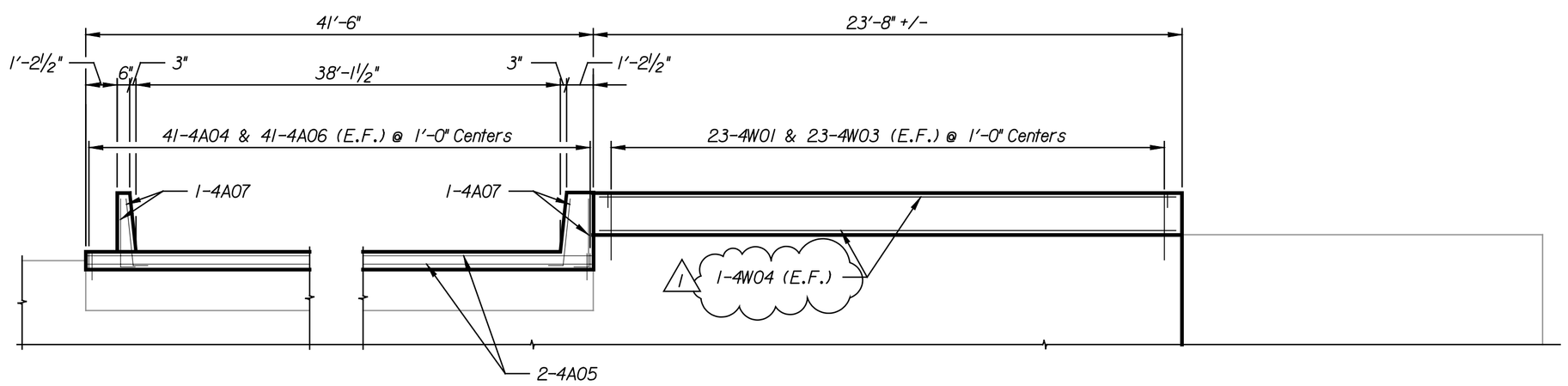

PARAPET AND WINGWALL ELEVATION D / DA1.8
Scale: 1/4" = 1'-0"

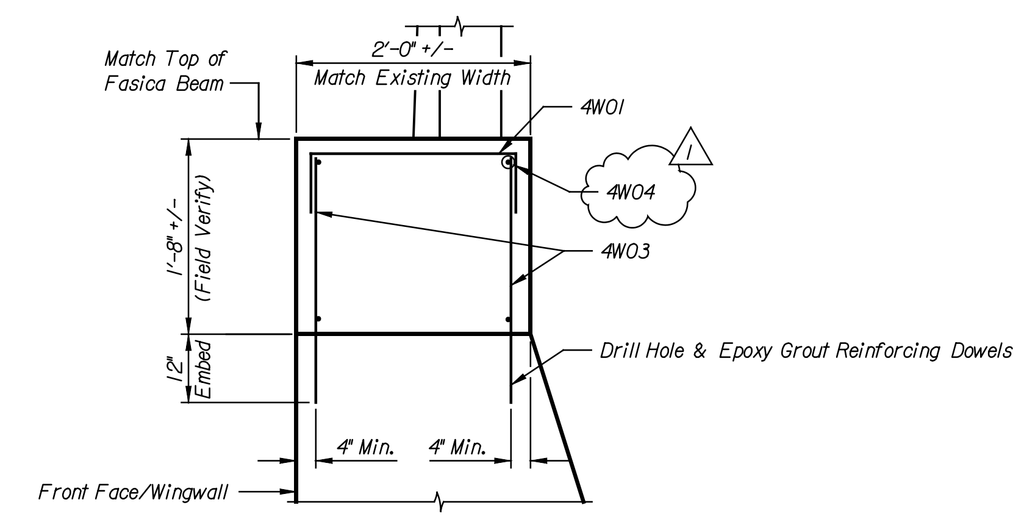

SECTION F / DA1.9
Scale: 1" = 1'-0"

NOTE:
Hole & Epoxy Grout is subsidiary to concrete.

REFERENCE:
Color Schedule, see sheet DA1.20.

NO.	DATE	REVISIONS	BY	APP'D
3				
2				
1	9/04	REINFORCING CHANGE	JWH	

CITY OF WICHITA

WICHITA CENTRAL CORRIDOR
ALTERNATE 8
DOUGLAS AVENUE
ABUTMENT 6 DETAILS

SHEET NO.	OF	SCALE	AS NOTED	APP'D			
DESIGNED	DMH	DETAILED	DJJ	QUANTITIES	DJJ	TRACED	DJJ
DESIGN CK.	JWH	DETAIL CK.	JWH	QUAN.CK.	DMH	TRACE CK.	DMH

LOCATION:
BNSF BR. 210.8 WICHITA, KS LINE SEGMENT 7400

This sheet designed by:

HNTB
ARCHITECTS ENGINEERS PLANNERS

Plotted on: 04-JAN-2005 12:26 $time$
djamison Plot Queue: $queue$
Pen Table: $pentable$
Plot Scale: $scale$
Design Filename: K:\B2304\Bridges\Dec2004\Douglas Alternate\Drawings\dl2a.dgn.