STATE	PROJECT NO.	YEAR	SHEET NO.	TOTAL SHEETS
KANSAS	472-84071	2005	DAI.19	

DATE	BY

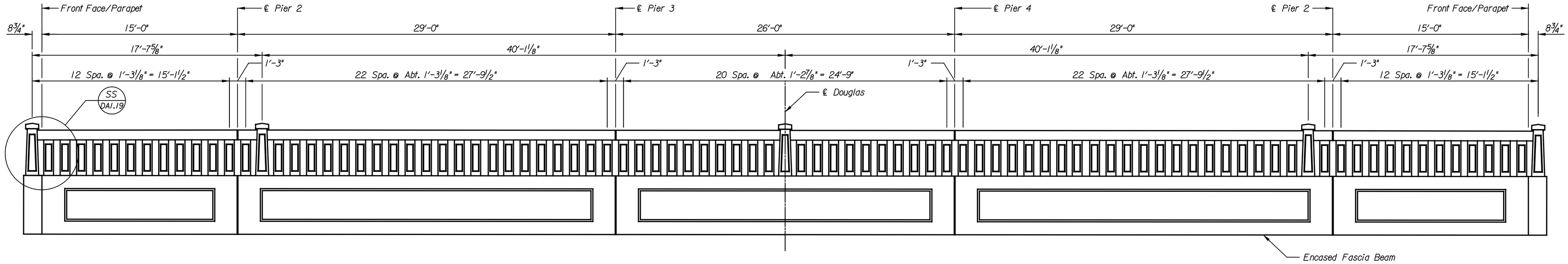

WEST FASCIA ELEVATION

Scale: ¼"=1'-0"

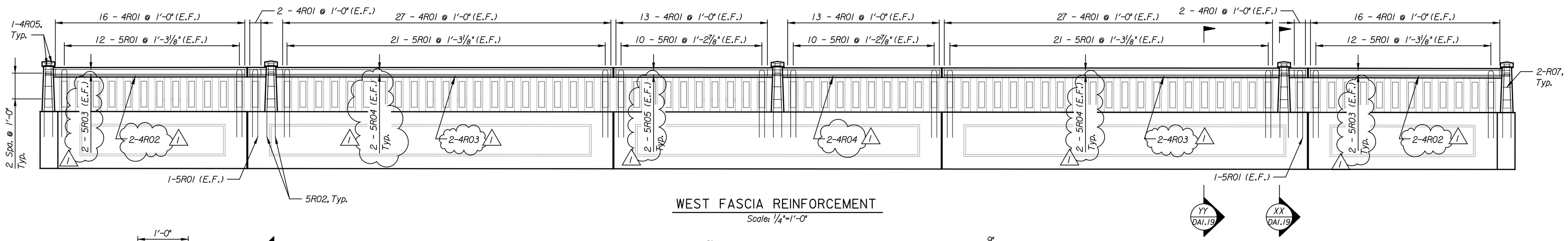

WEST FASCIA REINFORCEMENT

Scale: ¼"=1'-0"

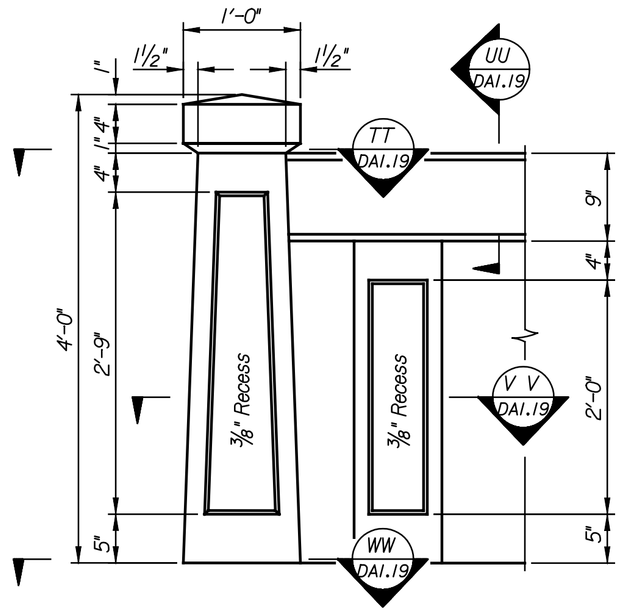

DETAIL SS

Scale: 1" = 1'-0" DAI.19 DAI.9

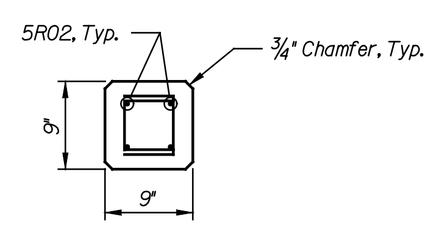

SECTION TT

Scale: 1" = 1'-0" DAI.19

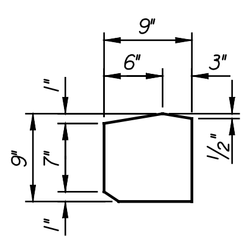

SECTION UU

Scale: 1" = 1'-0" DAI.19

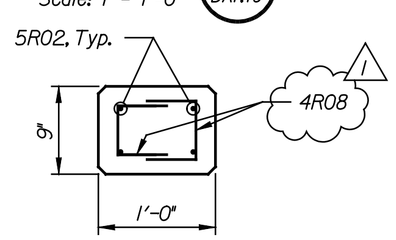

SECTION WW

Scale: 1" = 1'-0" DAI.19

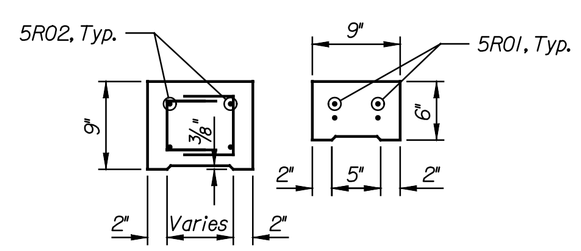

SECTION VV

Scale: 1" = 1'-0" DAI.19

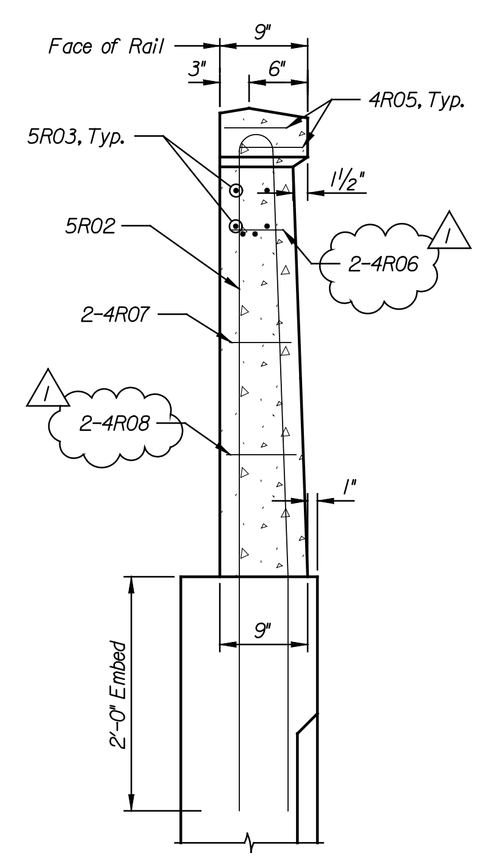

SECTION XX

Scale: 1" = 1'-0" DAI.19

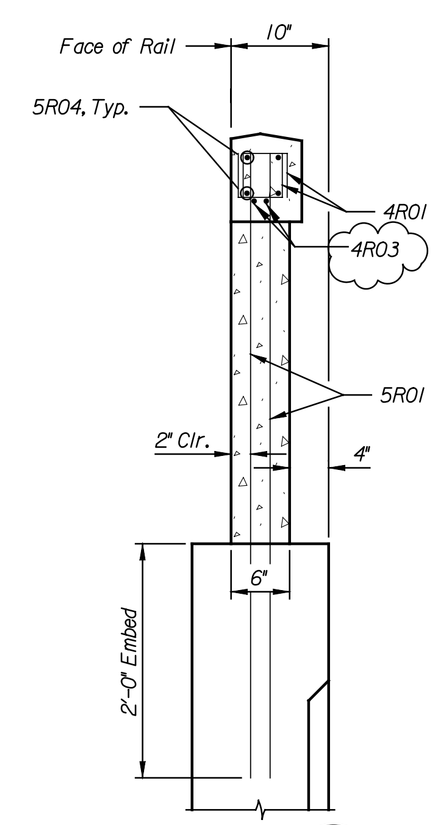

SECTION YY

Scale: 1" = 1'-0" DAI.19

This sheet designed by:

HNTB

ARCHITECTS ENGINEERS PLANNERS

NO.	DATE	REVISIONS	BY	APP'D
3				
2				
1	9/04	REINFORCING CHANGE	JWH	

CITY OF WICHITA

WICHITA CENTRAL CORRIDOR
ALTERNATE 8
DOUGLAS AVENUE
HANDRAIL ELEVATION & DETAILS

SHEET NO.	OF	SCALE AS NOTED	APP'D				
DESIGNED	DMH	DETAILED	DJJ	QUANTITIES	DJJ	TRACED	DJJ
DESIGN CK.	JWH	DETAIL CK.	JWH	QUAN.CK.	DMH	TRACE CK.	DMH

LOCATION: BNSF BR. 210.8 WICHITA, KS Scale: 1" = 1'-0" LINE SEGMENT 7400

Plotted on: 04-JAN-2005 12:27 $time$
djamison Plot Queue: $queue$
Plot Scale: $scale$ Pen Table: $pentable$
Design Filename: K:\B23049\Bridges\Dec2004\Douglas Alternate\Drawings\d09.dgn.