STATE	PROJECT NO.	YEAR	SHEET NO.	TOTAL SHEETS
KANSAS	472-84071	2005	DAI.4	

DATE	BY

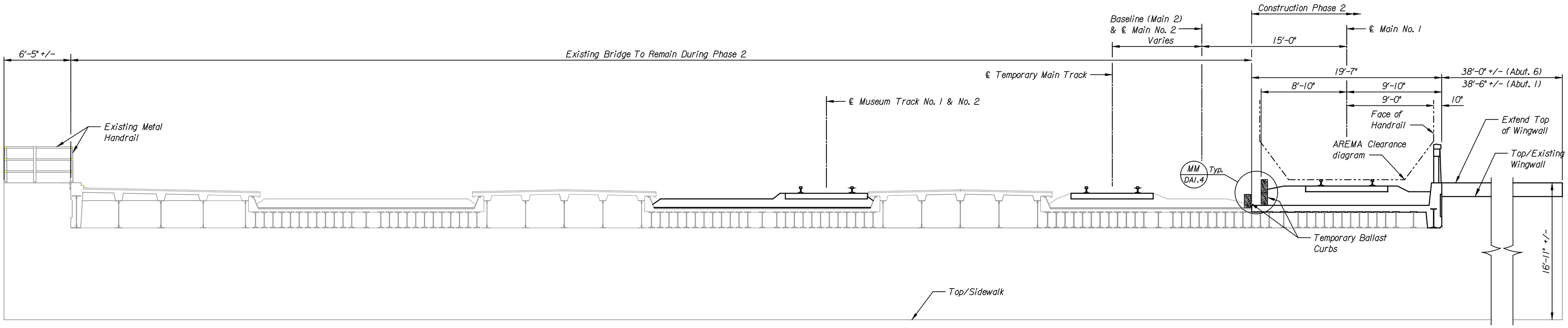

SECTION C / DAI.1
Not To Scale
Construction Phase 2

Note:
Abutment No. 6 shown
Abutment No. 1 similar

Note:
Extend top of wingwall at Abutment No. 1 & 6.
Add handrail at Abutment No. 1.

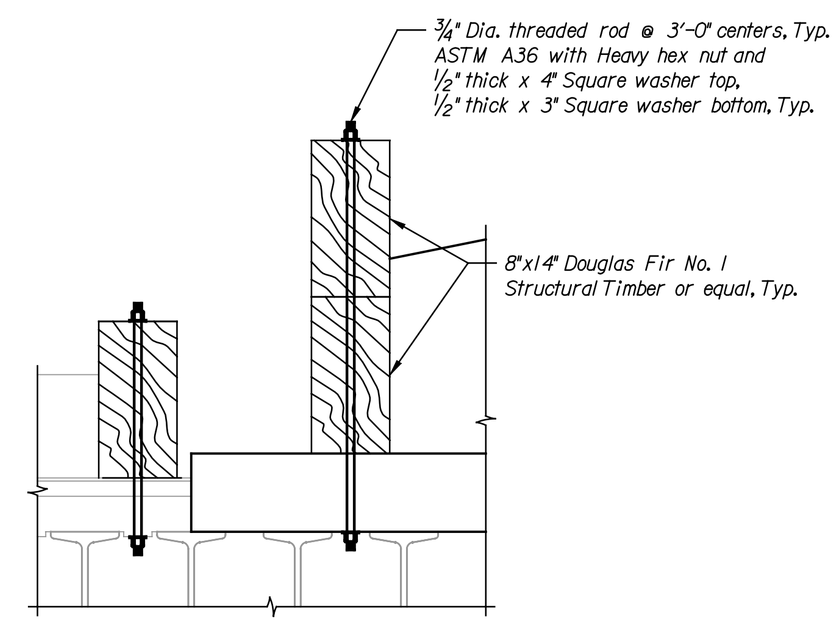

DETAIL MM / DAI.4
Scale: 1" = 1'-0"

Plotted on: 04-JAN-2005 12:25 $time$
djamison Plot Queue: $queue$
Plot Scale: $scale$ Pen Table: $pentable$
Design Filename: K:\B29049\Bridges\Dec2004\Douglas Alternate\Drawings\d02a.dgn

This sheet designed by:

HNTB
ARCHITECTS ENGINEERS PLANNERS

NO.	DATE	REVISIONS	BY	APP'D
3				
2				
1				

CITY OF WICHITA

WICHITA CENTRAL CORRIDOR

ALTERNATE 8
DOUGLAS AVENUE
TYPICAL SECTIONS - PHASE 2

SHEET NO.	OF	SCALE AS NOTED	APP'D				
DESIGNED	FKD	DETAILED	DJJ	QUANTITIES	DJJ	TRACED	DJJ
DESIGN CK.	CMS	DETAIL CK.	JWH	QUAN.CK.	DMH	TRACE CK.	DMH

LOCATION:
BNSF BR. 210.8 LINE SEGMENT 7400
WICHITA, KS