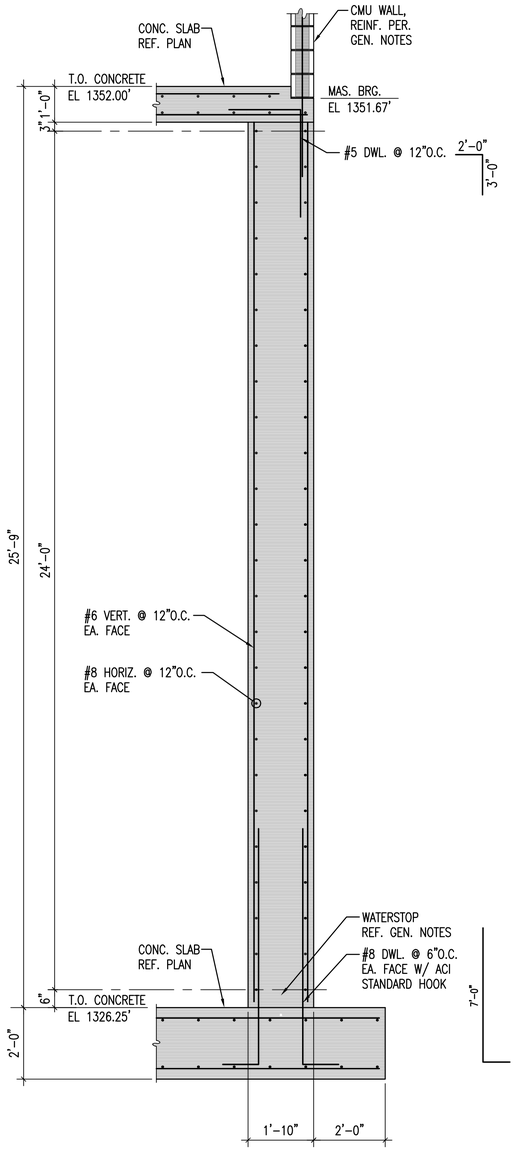

1 / 50 **EXTERIOR WETWELL SECTION**
1/2"=1'-0"

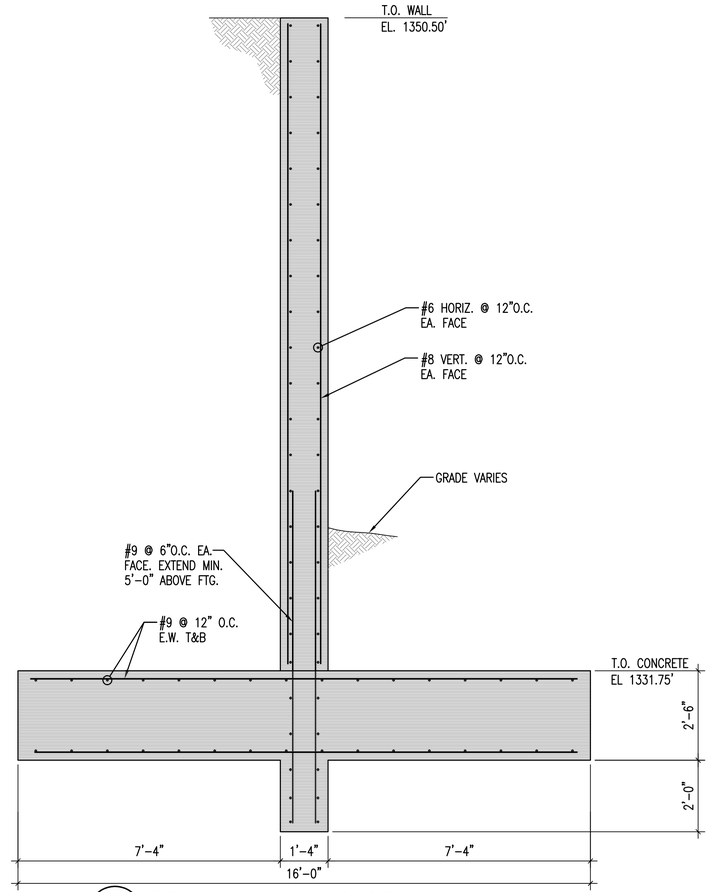

2 / 50 **RETAINING WALL SECTION**
1/2"=1'-0"

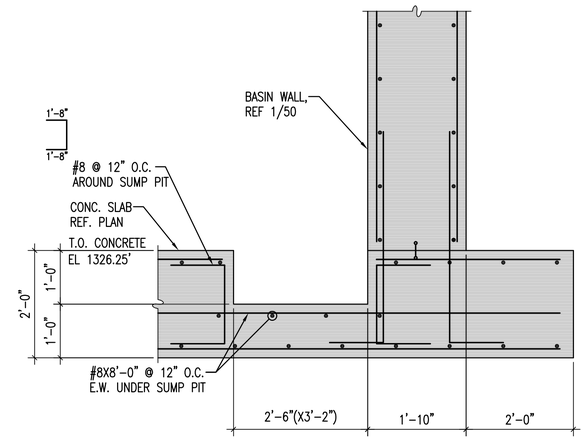

3 / 50 **SUMP PIT**
3/4"=1'-0"

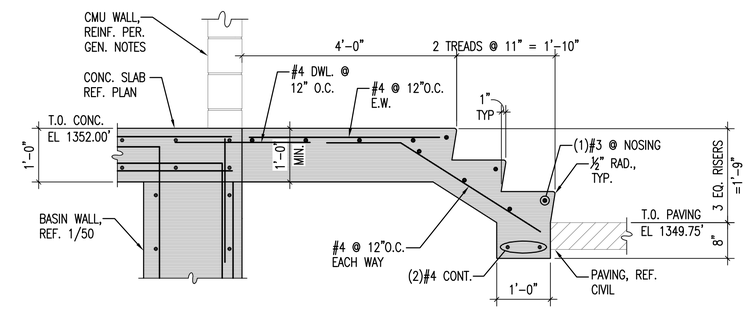

4 / 50 **SECTION THROUGH STAIRS**
1/2"=1'-0"

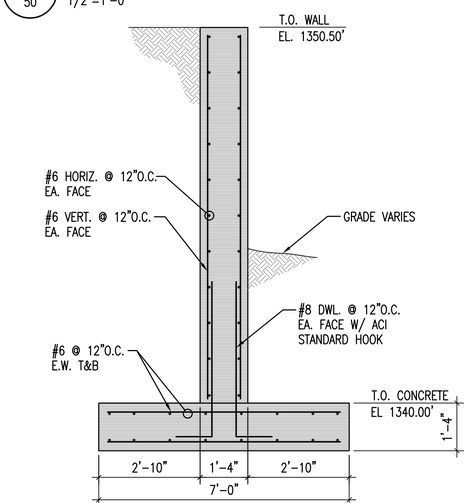

5 / 50 **RETAINING WALL SECTION**
1/2"=1'-0"

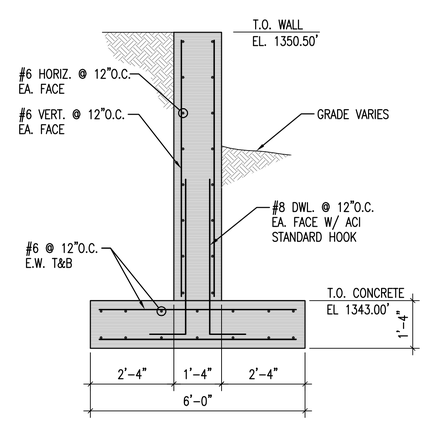

6 / 50 **RETAINING WALL SECTION**
1/2"=1'-0"

No.	Revision	By	Date

PHASE II – STORM WATER DRAIN #332

EAST PUMP STATION STRUCTURAL DETAILS

JAMES L. ARMOUR, P.E.– CITY ENGINEER
CITY OF WICHITA PROJECT NO. 468-84396

Professional Engineering Consultants, P.A.
303 S. TOPEKA • WICHITA, KANSAS 67202
316-262-2691 • FAX 316-262-3003

Designed by	GB	Job No.	35-04274-042
Drawn by	DC	Date	SEPTEMBER 2009

Saved 09-29-2009 11:30:46 AM by DGC
Plot Scale 1:16 09-29-2009 11:31:01 AM by DGC
S:\2004\04274\04-042\Vte-200\04274-50-DTLS