STATE	PROJECT NO.	YEAR	SHEET NO.	TOTAL SHEETS
KANSAS	87 N-0361-01	2011	114	169

MKEC ENGINEERING CONSULTANTS, INC.
411 N. WEBB ROAD
WICHITA, KS. 67206
316 - 684 - 9600

LINCOLN STREET BRIDGE AND DAM IMPROVEMENTS OVER ARKANSAS RIVER

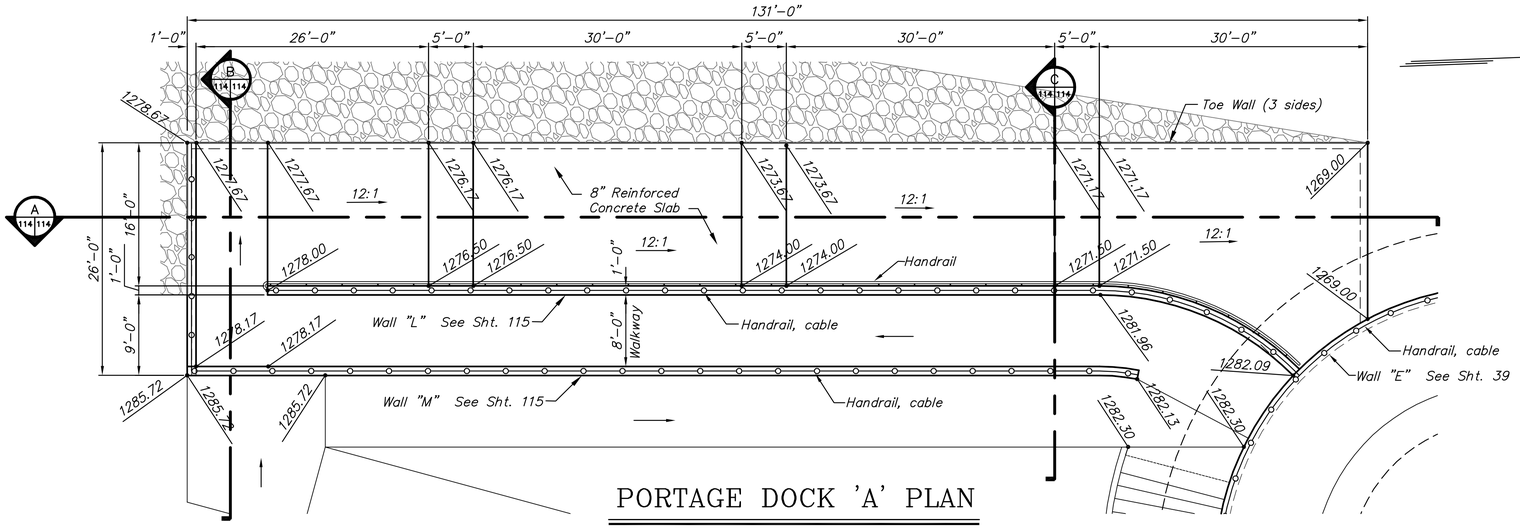

PORTAGE DOCK 'A' PLAN

SCALE: 1/8" = 1'-0"

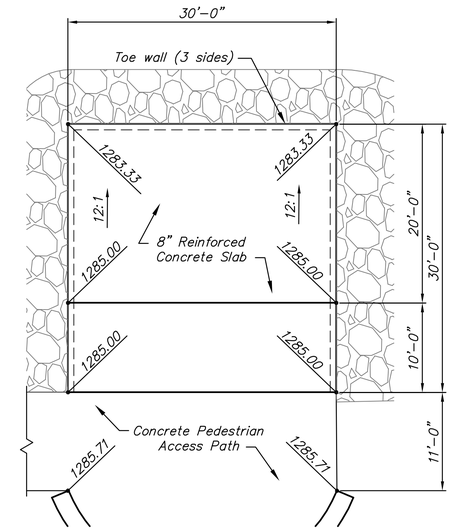

PORTAGE DOCK 'B' PLAN

SCALE: 1/8" = 1'-0"

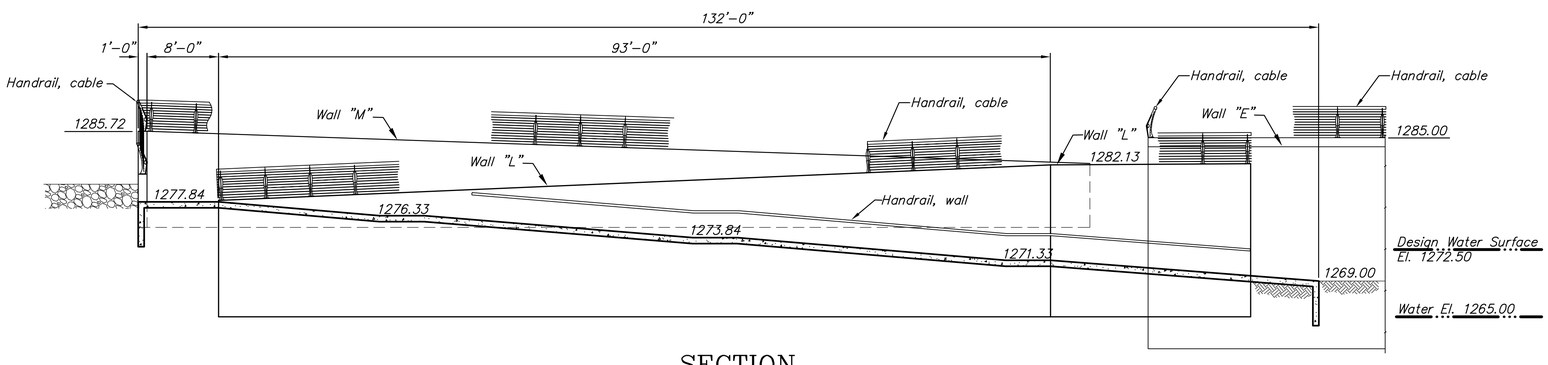

SECTION A

SCALE: 1/8" = 1'-0"

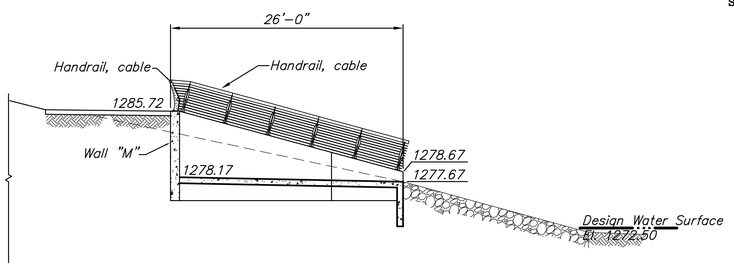

SECTION B

SCALE: 1/8" = 1'-0"

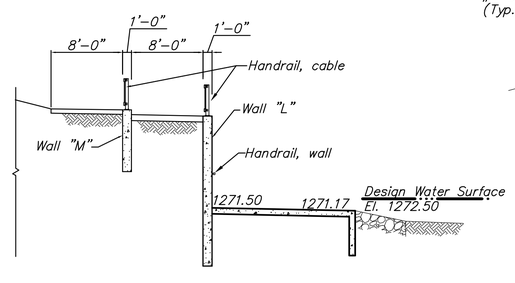

SECTION C

SCALE: 1/8" = 1'-0"

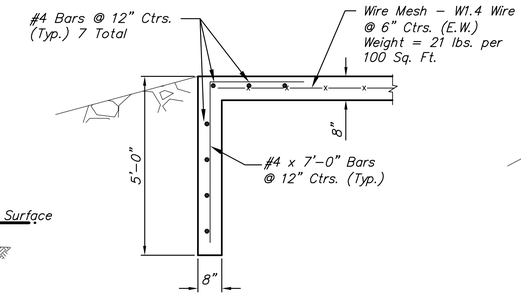

PORTAGE DOCK 'A'

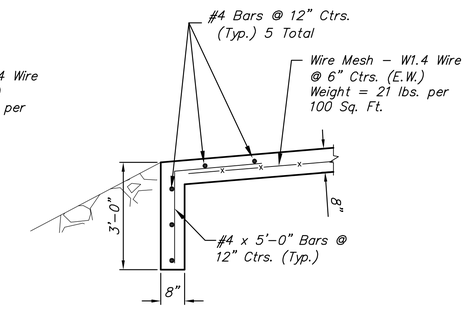

PORTAGE DOCK 'B'

TYPICAL TOE WALL DETAIL

SCALE: 1/2" = 1'-0"

PORTAGE DOCK PLAN

SHEET TITLE

472-84883

PROJECT NUMBER

JAG

DESIGN BY

DPG

DRAWN BY

CHECKED BY

ISSUED

1/24/2011

REVISED

SHEET NO.

114 of 169

J:\CIVIL\07433\DWG\DAM\PLANS\07433 BOAT DOCK PLAN.DWG

PLOTTED: Tuesday, January 25, 2011 @ 08:39AM