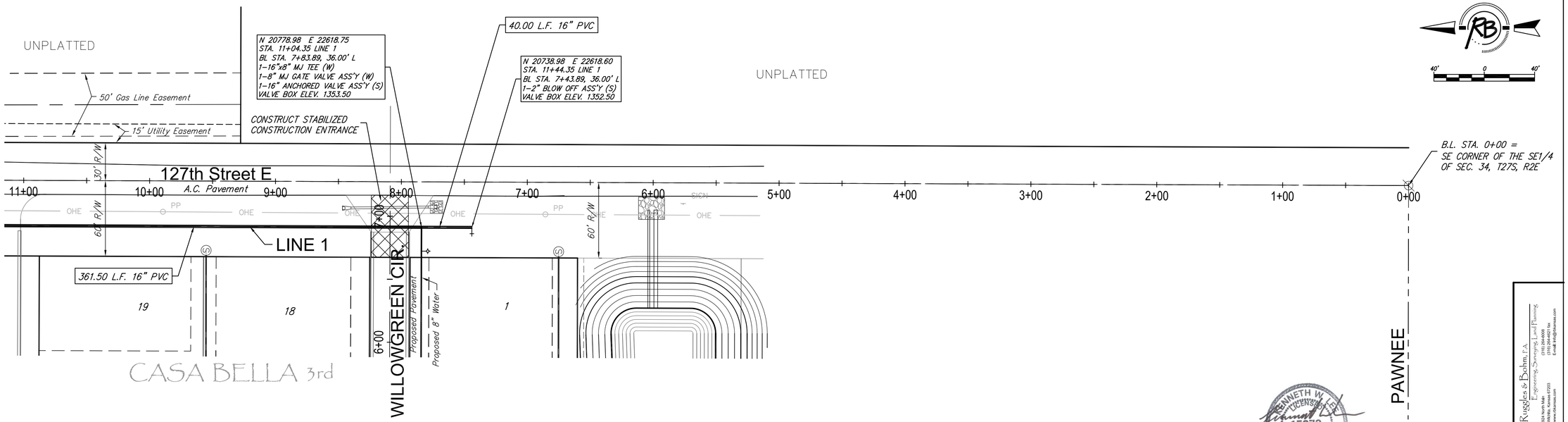

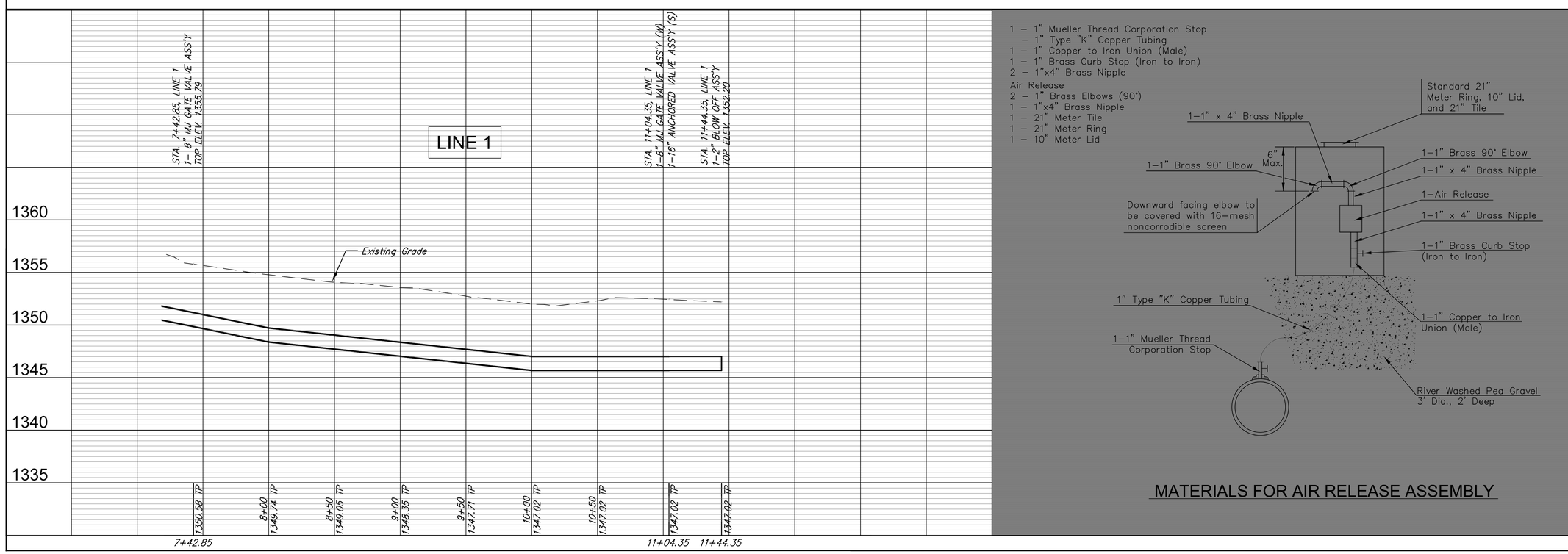

1 – 1" Mueller Thread Corporation Stop
– 1" Type "K" Copper Tubing
1 – 1" Copper to Iron Union (Male)
1 – 1" Brass Curb Stop (Iron to Iron)
2 – 1"x4" Brass Nipple

Air Release
2 – 1" Brass Elbows (90°)
1 – 1"x4" Brass Nipple
1 – 21" Meter Tile
1 – 21" Meter Ring
1 – 10" Meter Lid

MATERIALS FOR AIR RELEASE ASSEMBLY

KENNETH W. LEE LICENSED 15373 2-28-11 KANSAS PROFESSIONAL ENGINEER

Rugedes & Bohm, P.A.
Engineering, Surveying, Land Planning
934 North Rock Road, Suite 100
Wichita, Kansas 67203
(316) 945-4633 tel
(316) 945-4633 fax
E-mail: info@rbpa-ks.com
www.rbpa-ks.com

DESIGN	KWL
DRAWN	RA
DATE	-
REVISED	
REVIEW	
UTILITY	
PROJECT NUMBER	-
DRAWING FILE	Casa Bella 3 Eng Base 316 Inch WATER 2

WATER DISTRIBUTION SYSTEM
LINE 1
WICHITA, KANSAS

RB JOB 3743E

SHEET 3 OF 10