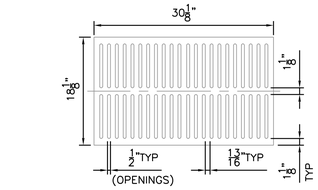

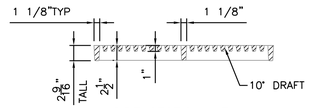

SIDE SECTION VIEW

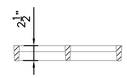

END SECTION VIEW

ADA GRATE, CATALOG NO. V-4230-1
W/ SLOT OPENING WIDTH OF 1/2"

EAST JORDAN IRON WORK FOUNDRY

N.T.S.

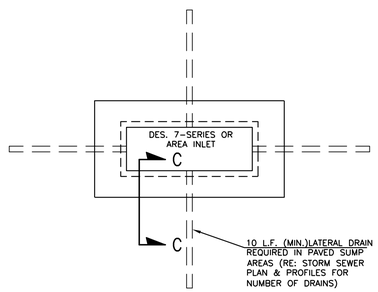

INFILTRATION DRAINS AT AREA INLET

N.T.S.

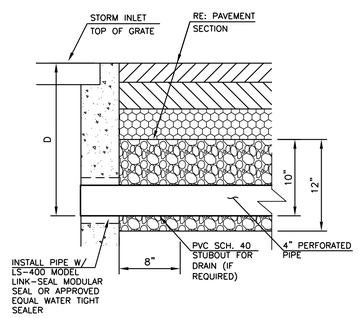

SECTION C-C

N.T.S.

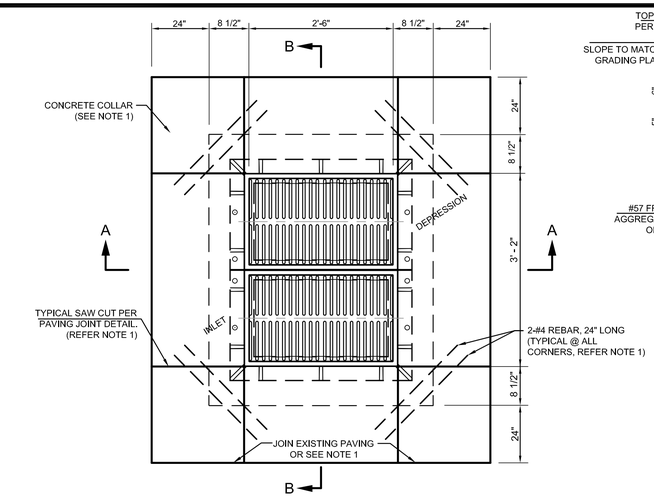

PLAN

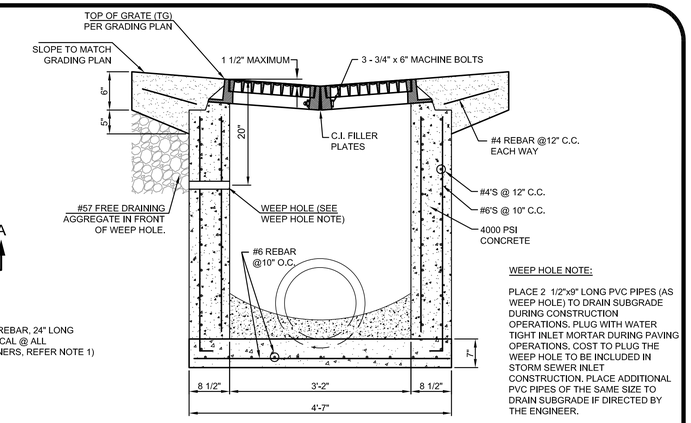

SECTION B-B

WEEP HOLE NOTE:

PLACE 2 1/2"x9" LONG PVC PIPES (AS WEEP HOLE) TO DRAIN SUBGRADE DURING CONSTRUCTION OPERATIONS. PLUG WITH WATER TIGHT INLET MORTAR DURING PAVING OPERATIONS. COST TO PLUG THE WEEP HOLE TO BE INCLUDED IN STORM SEWER INLET CONSTRUCTION. PLACE ADDITIONAL PVC PIPES OF THE SAME SIZE TO DRAIN SUBGRADE IF DIRECTED BY THE ENGINEER.

STORM SEWER INLET

DESIGN #6 (DOUBLE GRATINGS)

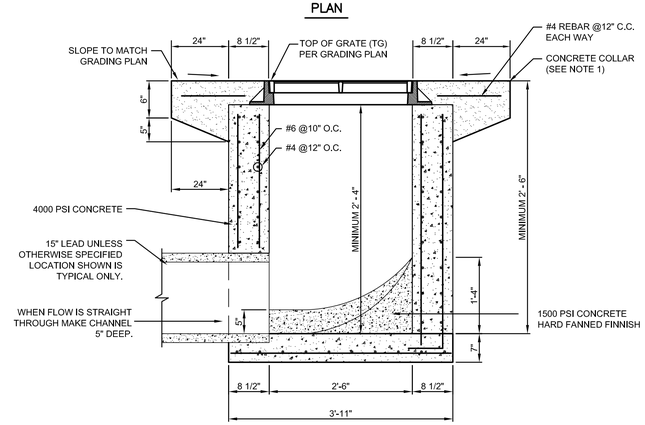

SECTION A-A

DESIGN #6 INLET

N.T.S

GENERAL NOTES

1-a. WHEN INLET IS BUILT IN NEW CONCRETE PAVEMENT, THE INLET CONCRETE APRON SHALL BE MONOLITHIC WITH NEW CONCRETE PAVEMENT AND SHALL CONFORM TO PLANS AND SPECIFICATIONS THEREOF. THE SAW CUT LAYOUT FOR INLET CONCRETE APRON SHALL MATCH WITH THE MONOLITHIC CONCRETE PAVING. PROVIDE 2-#4, 24" LONG DIAGONAL REBARS AT ALL INLET CORNERS WHEN POURING CONCRETE MONOLITHIC PAVEMENT.

1-b. WHEN INLET IS BUILT IN NEW ASPHALT PAVEMENT, THE INLET CONCRETE APRON SHALL FLUSH WITH NEW ASPHALT PAVEMENT, THE NEW ASPHALT PAVEMENT SHALL BE 1/4" HIGHER THAN INLET CONCRETE APRON AT INTERFACE AND SHALL HAVE THICKENED EDGE AS PER DETAIL SHOWN HERE. PROVIDE SAW CUT IN INLET CONCRETE APRON AS PER DETAIL SHOWN HERE. CONCRETE SAW CUT SHALL BE SEALED IN ACCORDANCE WITH THE CONCRETE JOINT DETAILS SHOWN IN PROJECT PLANS.

1-c. WHEN INLET IS BUILT IN EXISTING CONCRETE OR ASPHALT PAVEMENT THE INLET CONCRETE APRON SHALL CONFORM TO NOTE 1-b.

2. CAST IRON STEPS SHALL BE PLACED IN ALL INLETS 3' OR MORE IN DEPTH IN CONFORMITY WITH STANDARD OSHA GUIDELINES.

3. GRATINGS TO BE USED IN THIS STRUCTURE WILL BE SHOWN ON THE PLANS OR DESIGNATED IN DETAILS.

4. BASIS OF PAYMENT FOR INLETS SHALL BE LUMP SUM INCLUDING REMOVAL AND REPLACEMENT OF EXISTING PAVEMENT.

5. CONCRETE SHALL BE AIR ENTRAINED PER PROJECT SPECS.

6. STORM SEWER STRUCTURES (JUNCTION BOX/MANHOLE/INLETS) SHALL BE PRE-CAST IN ACCORDANCE WITH ASTM STANDARDS. SUBMITTALS FOR PRE-CAST STRUCTURES WITH A WALL THICKNESS OTHER THAN SHOWN HERE SHALL BE SUPPORTED BY ENGINEER'S APPROVED SHOP DRAWINGS. NO BRICK CONSTRUCTION IS ALLOWED.

7. A MINIMUM OF 6" THICK 1 1/2" CLEAN ROCK/AGGREGATE BASE (ASTM #57) WILL BE REQUIRED UNDER STORM SEWER STRUCTURES (JUNCTION BOX/MANHOLE/INLETS).

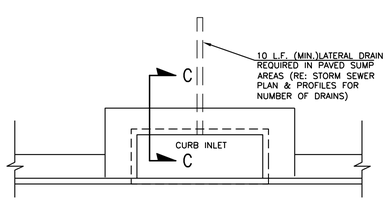

INFILTRATION DRAINS AT CURB INLET

N.T.S.

GENERAL NOTES – INFILTRATION DRAINS

1. INFILTRATION DRAINS IN LANDSCAPE AREAS NOT REQUIRED.

2. STORM SEWER SYSTEM SHALL BE INSTALLED PRIOR TO THE INSTALLATION OF INFILTRATION DRAINS. CONTRACTOR SHALL ESTABLISHED LAYOUT OF THE INFILTRATION DRAINS WITHOUT CAUSING ANY CONFLICT WITH THE PROPOSED STORM SEWER SYSTEM AND OTHER UNDERGROUND UTILITIES. INFILTRATION DRAINS CAN BE INSTALLED NEXT TO THE STORM SEWER ENTERING/LEAVING THE INLET.

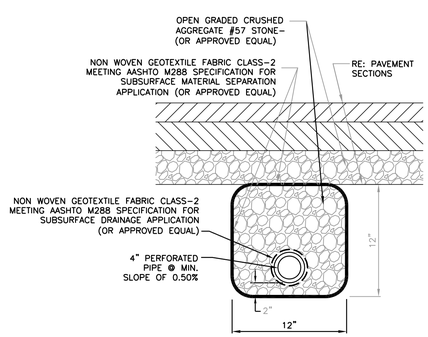

INFILTRATION DRAIN DETAIL

N.T.S

AS BUILTS

kemiller engineering

516 S. Market,
Wichita, KS 67202
(316)264-0242

NOT VALID FOR CONSTRUCTION
UNLESS SIGNED IN THIS BLOCK

DESIGN #6 INLET DETAILS

WALMART MARKET #5991-00

31st STREET & S. SENECA
WICHITA, KANSAS

SMC Consulting Engineers, P.C.
815 West Main – Oklahoma City, OK 73106
PH: 405-232-7715 Fax: 405-232-7859
SMC
KANSAS CERTIFICATE OF AUTHORIZATION NO. E-335 EXP. DEC. 2011

No.	Revision	By	Date

DATE: 04/12/11
DRAWN BY: MDS
PROJECT NO.: 4966.00
SCALE: NTS
ENGINEER: TERENCE L. HAYNES, P.E. #14583

SHEET NO.
C-9.11