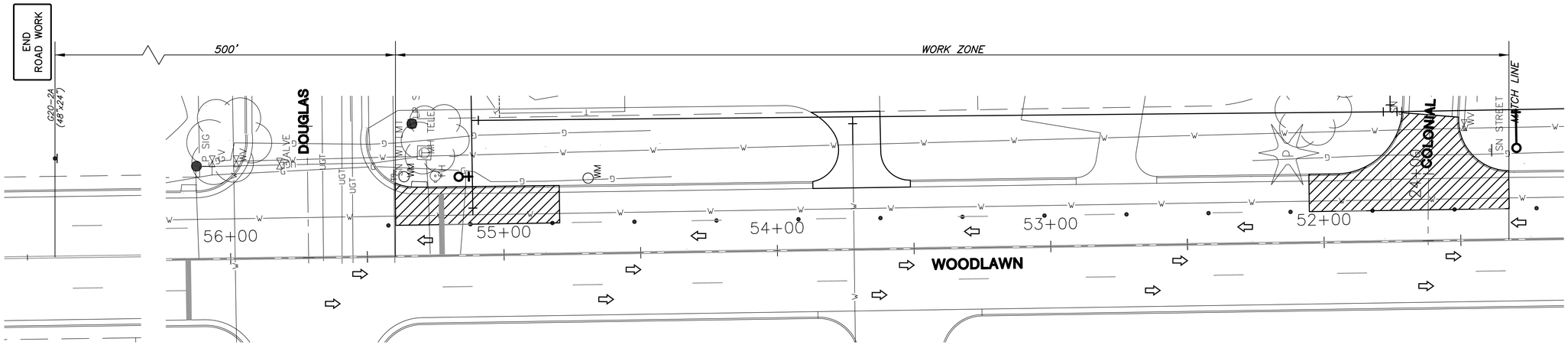

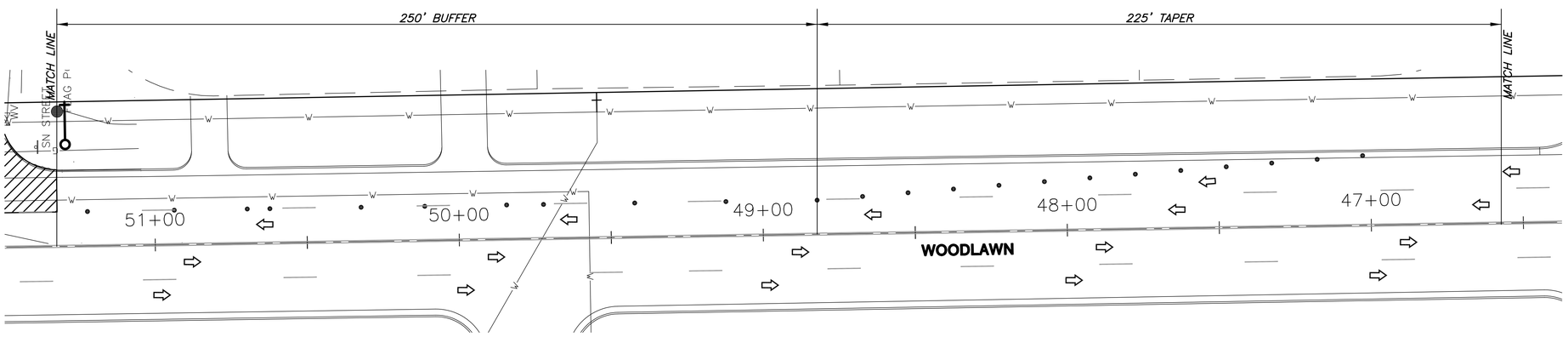

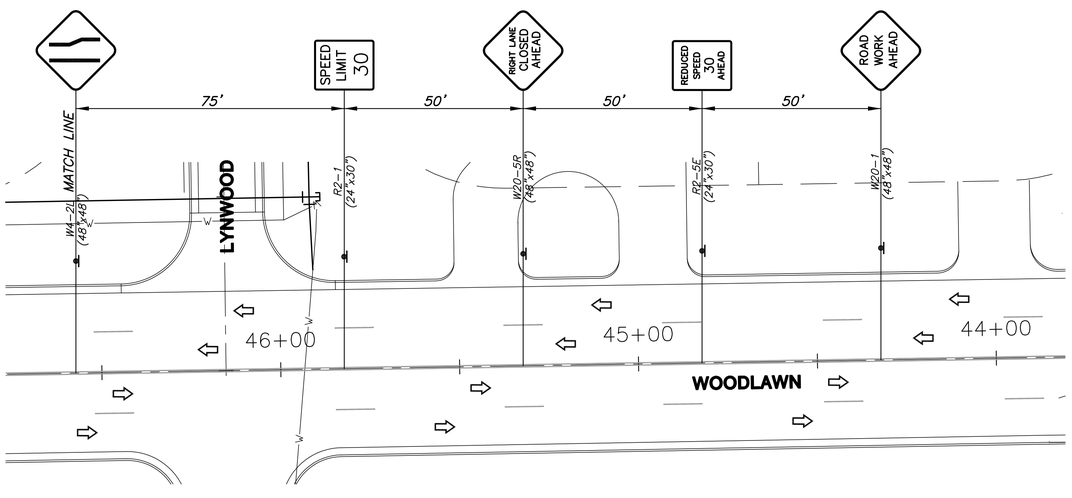

SCALE: 1"=20'

20 10 0 20

LEGEND

- One Post Sign
- Traffic Lane
- Work Area
- Reflectorized Drum
- Tubular Marker
- Direction of Traffic

GENERAL NOTES

1. THE CONTRACTOR IS RESPONSIBLE FOR MAKING CONNECTIONS TO EXISTING WATER MAINS IN A TIMELY MANNER TO LIMIT TRAFFIC FLOW RESTRICTIONS ALONG WOODLAWN.
2. ANY EXISTING PAVEMENT ALONG WOODLAWN THAT IS DISTURBED DURING CONNECTION TO EXISTING MAINS SHALL BE REPAIRED ACCORDING TO THE "PAVEMENT REMOVAL & REPLACEMENT DETAIL" ON THIS SHEET.
3. ANY EXISTING LANDSCAPING, HARDSCAPING, FENCING, LAWN TURF, ETC. DISRUPTED SHALL BE REPAIRED OR REPLACED IN LIKE KIND. THESE ACTIVITIES SHALL TAKE PLACE AS SOON AS POSSIBLE AFTER CONSTRUCTION ACTIVITIES IN EACH AREA ARE COMPLETED.
4. WHEN WORKING IN AREAS SURROUNDING EXISTING TREES, THE CONTRACTOR SHALL PROCEED WITH CAUTION AVOIDING DAMAGE TO ROOT STRUCTURES OR LOW-LYING BRANCHES. IT WILL BE THE RESPONSIBILITY OF THE CONTRACTOR TO ADDRESS ANY DAMAGES TO EXISTING TREES PRIOR THE END OF CONSTRUCTION ACTIVITIES ON SITE.
5. CONTRACTOR TO PROVIDE HIS OWN TRAFFIC CONTROL PLAN AND SUBMIT TO PROJECT ENGINEER FOR APPROVAL PRIOR TO CONSTRUCTION START.

NOTE:
BITUMINOUS MATERIAL SHALL BE COMMERCIAL GRADE, CONFORMING TO THE REQUIREMENTS OF SECTION 605 "KDOT STANDARD SPECIFICATIONS FOR STATE ROAD & BRIDGE CONSTRUCTION, 1990"

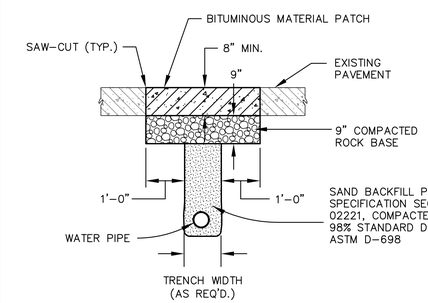

PAVEMENT REMOVAL & REPLACEMENT DETAIL

FOR USE ON WOODLAWN – NO SCALE

MKEC ENGINEERING CONSULTANTS, INC.
411 N. WEBB ROAD
WICHITA, KS. 67206
316 - 684 - 9600

KAY ANG LEWIS LICENSED 19288 6/28/12 KANSAS PROFESSIONAL ENGINEER

WATER MAIN REPLACEMENT PLANS FOR EASTBOROUGH SOUTH

TRAFFIC CONTROL PLAN
SHEET TITLE

448-90213
PROJECT NUMBER

DFL / JWC / JRA
DESIGNED DRAWN CHECKED

ISSUED
August 2012

REVISED

SHEET NO.
33 of 40

J:\CIVIL\06691\DWG\PAV\06691_E1.DWG

PLOTTED: Tuesday, August 28, 2012 @ 03:29PM