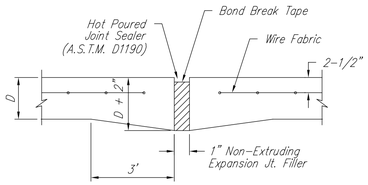

EXPANSION JOINT

NOTE: Extra Thickness to be Subsidiary to Price of Square Yards Pavement

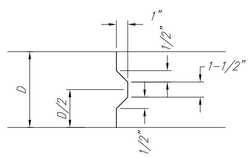

KEYWAY DETAIL

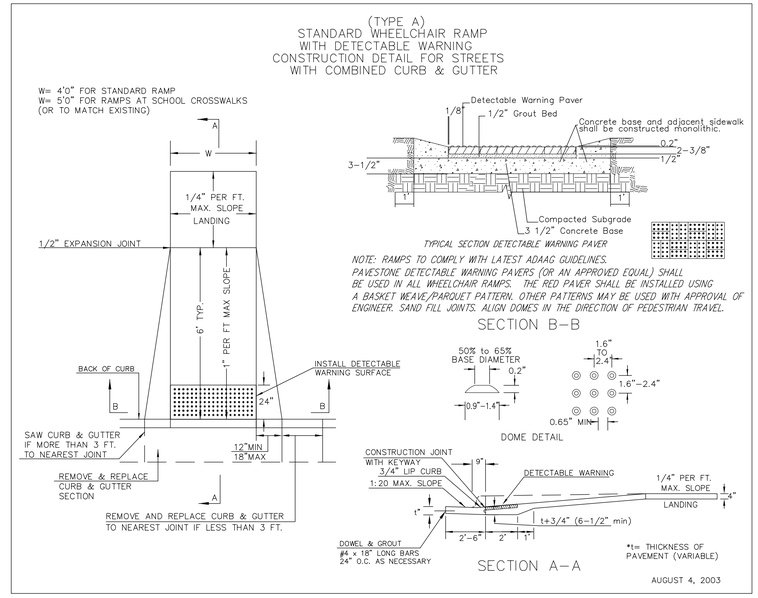

WHEELCHAIR RAMP DETAIL

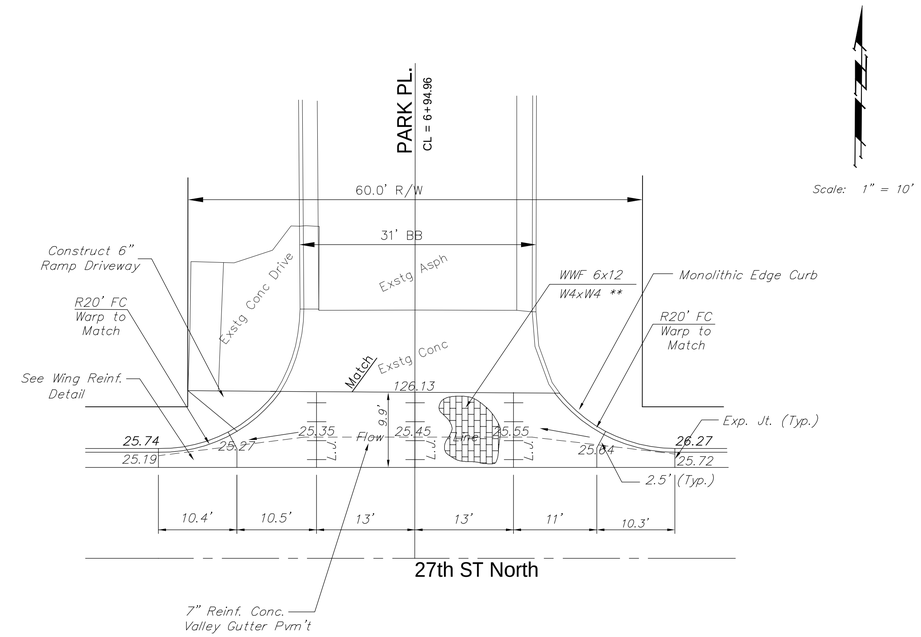

** NOTE: 6" X 12" W4XW4 Wire Fabric Reinforcing Shall Be Placed So That The Wires With The 6" Spacing Will Run Parallel With The Longitudinal Joints.

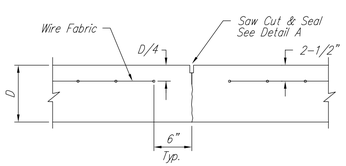

CONTRACTION JOINT DETAIL (C.J.)

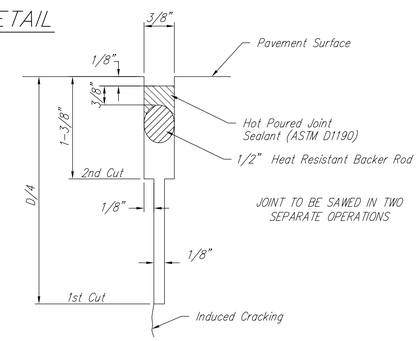

SAW JOINT DETAIL "A"

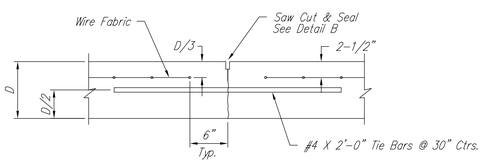

LONGITUDINAL JOINT DETAIL (L.J.)

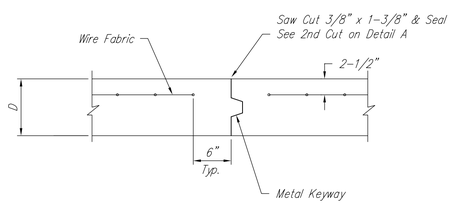

OPTIONAL CONTRACTION JOINT (CONSTRUCTION JOINT)

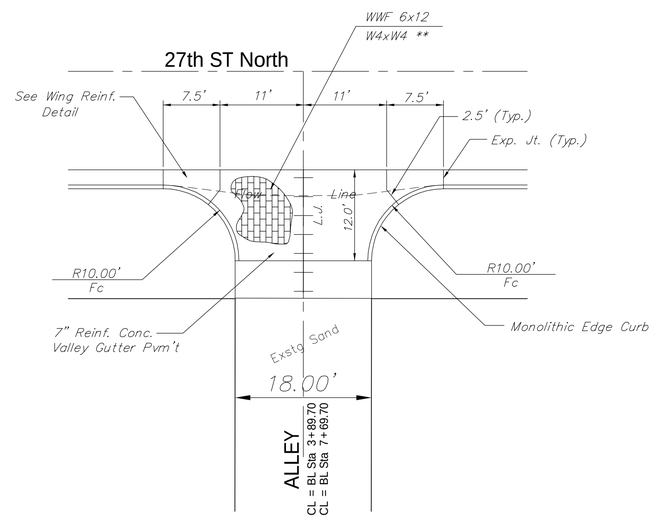

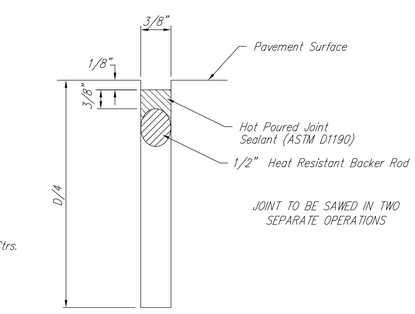

SAW JOINT DETAIL "B"

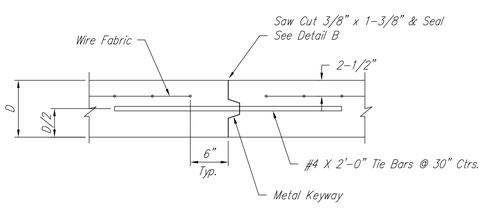

OPTIONAL LONGITUDINAL JOINT DETAIL (L.J.) (CONSTRUCTION JOINT)

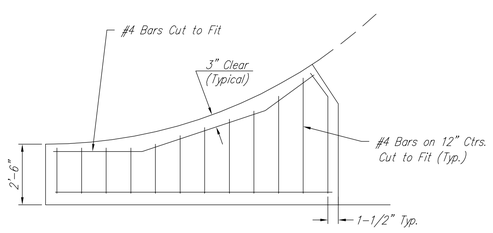

WING REINFORCING DETAIL

Drawing File: F:/Eng/27th StPavelackson to Market/27BASE_E1/VGDTL

SEPT 2004

Design: JFB Drawn: SGS Approved: JFB Scale: None	Project No. 04.05.E886 CAPITAL IMPROVEMENT PROJECT 27th Street North Paving Improvements 7" Reinforced Concrete Valley Gutter Details	Baughman Company , P.A. 315 Ellis St. Wichita, KS 67211 P 316-262-7271 F 316-262-0149 Baughman ENGINEERING | SURVEYING | PLANNING | LANDSCAPE ARCHITECTURE

Project No. 472 83958,83959,83960,&83961

SHEET 4 OF 24