STATE	PROJECT NO.	YEAR	SHEET NO.	SHEETS
KANSAS	87 N-0351-01	2012	3	220

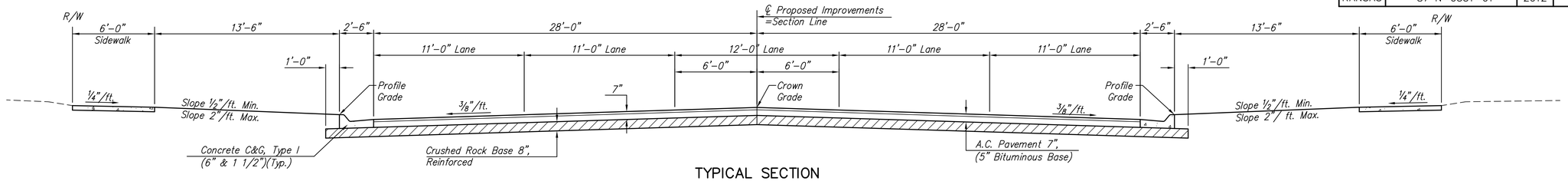

TYPICAL SECTION

Central Ave.
Sta. 63+78.09 to Sta. 70+78.86
Sta. 72+03.59 to Sta. 76+92.18
Sta. 78+39.07 to Sta. 79+59.07
Sta. 80+51.03 to Sta. 85+65.27
Sta. 88+53.67 to Sta. 99+29.58

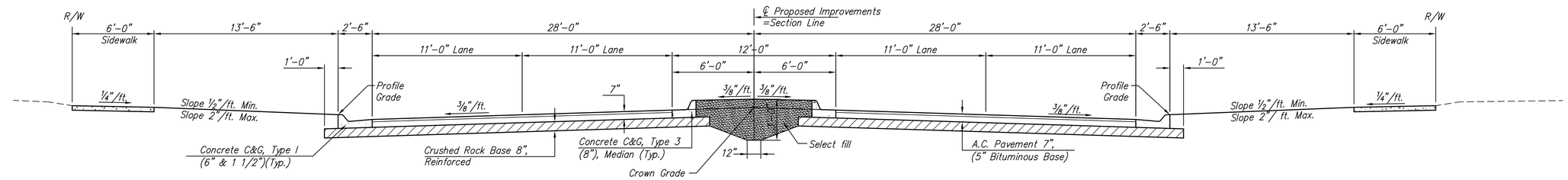

TYPICAL SECTION

Central Ave.
Sta. 49+90.18 to Sta. 57+73.83
Sta. 60+41.38 to Sta. 63+78.09
Sta. 70+78.86 to Sta. 72+03.59
Sta. 76+92.18 to Sta. 78+39.07

Central Ave.
Sta. 79+59.07 to Sta. 80+51.03
Sta. 85+65.27 to Sta. 88+53.67

135th Street
Sta. 46+72.27 to Sta. 48+26.42

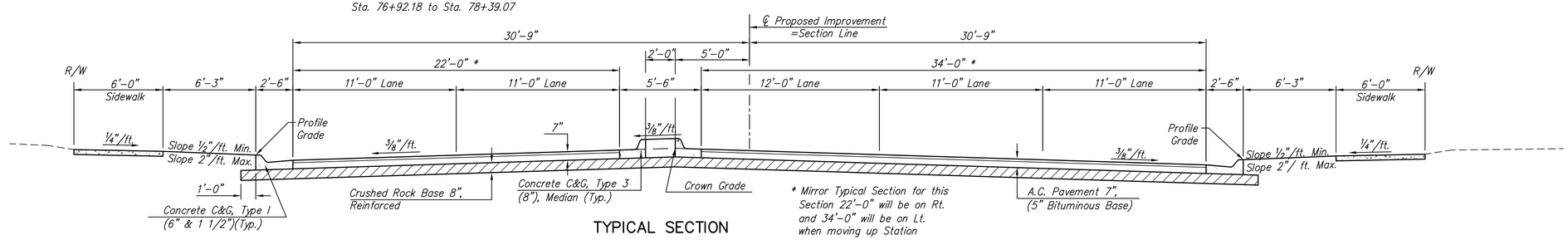

* Mirror Typical Section for this Section 22'-0" will be on Rt. and 34'-0" will be on Lt. when moving up Station

TYPICAL SECTION

Central Ave.
Sta. 45+69.14 to Sta. 47+08.93
* Sta. 48+52.41 to Sta. 49+90.18

135th Street
Sta. 48+26.42 to Sta. 49+28.32

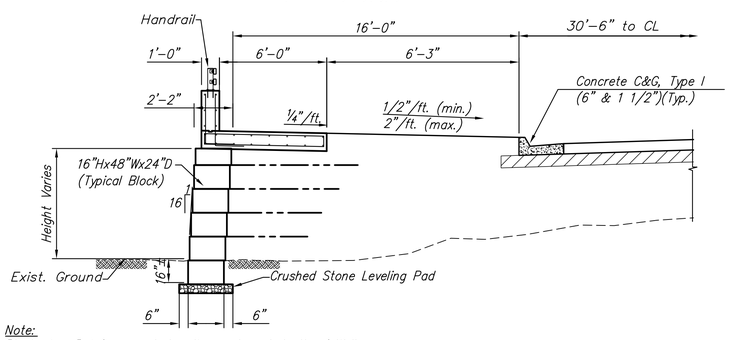

Note:
Block size, Reinforcement, Leveling pad, and depth of Wall are dependant on Wall Manufacturer design. They are shown here and in Cross-Sections for Information Only and are not based on an actual Wall design.

TYPICAL REINFORCED SEGMENTAL RETAINING WALL SECTION

Central Ave.

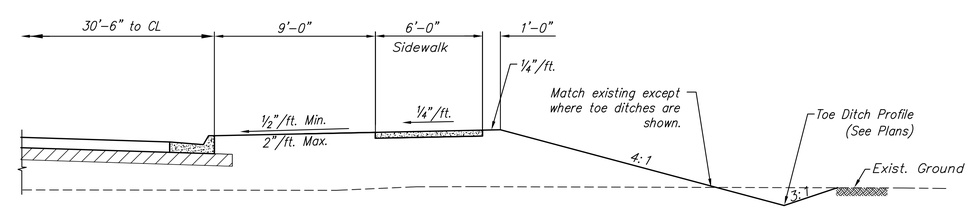

TYPICAL EMBANKMENT SECTION

Central Ave.

Note: Refer to paving plan for toe ditch locations.

MKEC ENGINEERING CONSULTANTS, INC.
411 N. WEBB ROAD
WICHITA, KS. 67206
316 - 684 - 9600

CENTRAL AVENUE IMPROVEMENTS FROM 135TH ST. W. TO 119TH ST. W.

TYPICAL SECTIONS
SHEET TITLE

472-84017
PROJECT NUMBER

JRA
DESIGN BY

WNJ
DRAWN BY

JRA
CHECKED BY

ISSUED
November 9, 2012
REVISED

SHEET NO.
3 of 220

PLOTTED: Wednesday, November 14, 2012 @ 01:40PM

J:\Civil\04238\Dwg\Title\04238TYP01.dwg