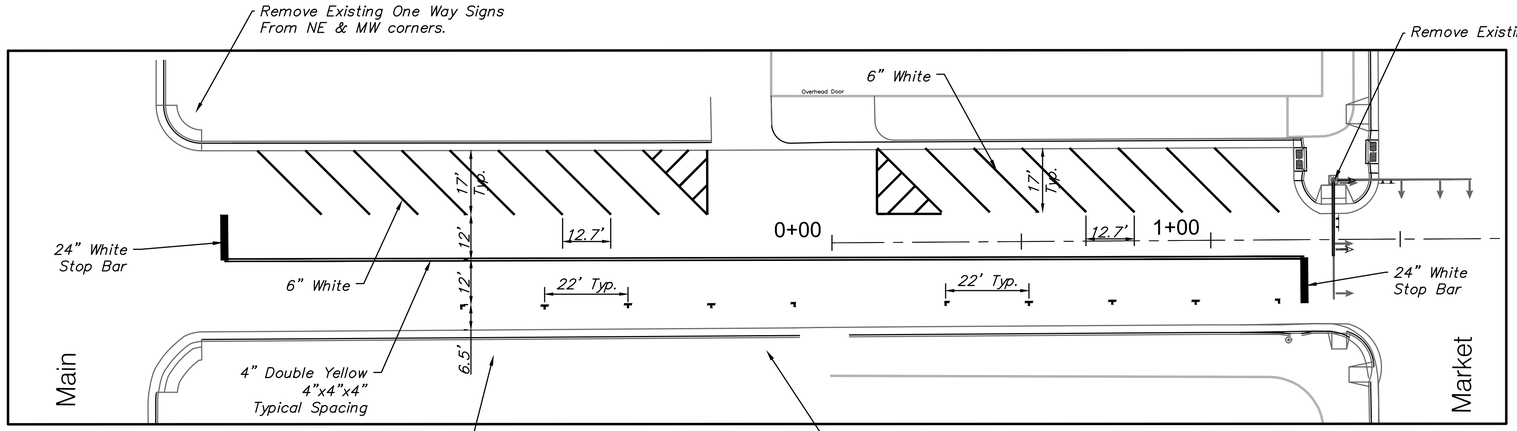

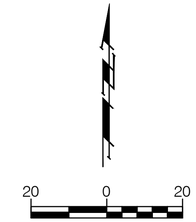

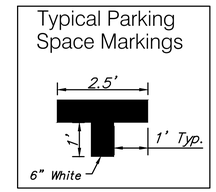

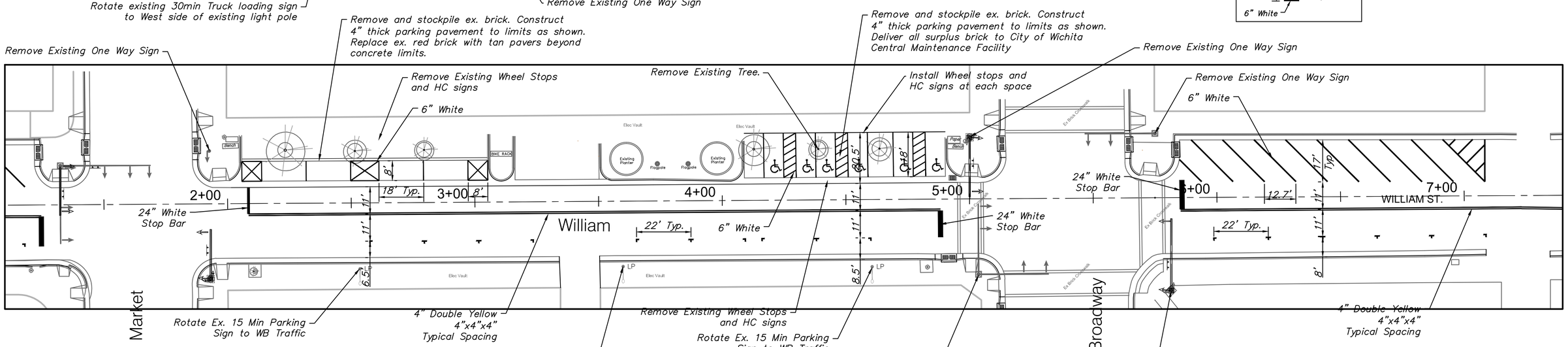

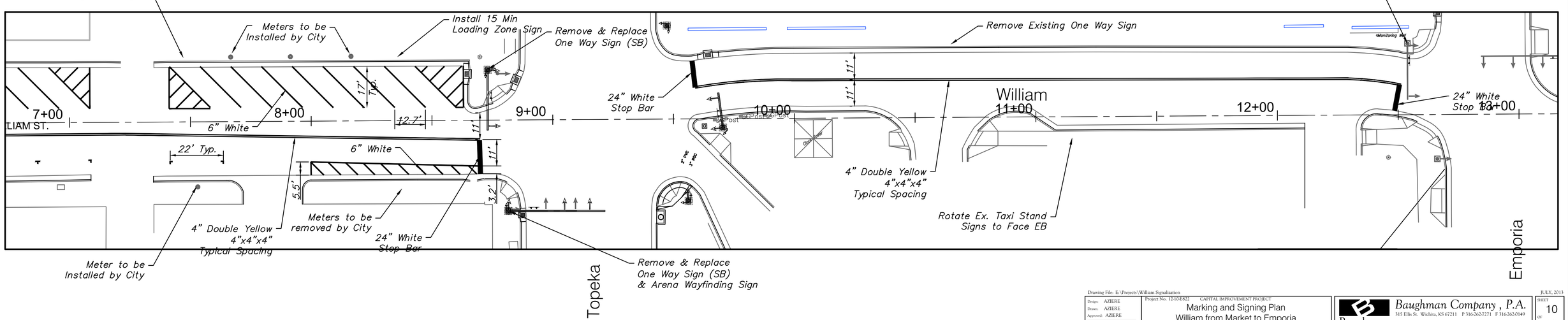
Meters to be
Installed by City
Install 15 Min
Loading Zone Sign
Remove & Replace
One Way Sign (SB)
Remove Existing One Way Sign
Monitoring Well
17' Typ.
7+00
WILLIAM ST.
8+00
9+00
10+00
11+00
12+00
13+00
12.7'
11'
11'
11'
11'
24" White
Stop Bar
24" White
Stop Bar
6" White
22' Typ.
6" White
5.5'
3.2'
Post
Post
Post