STATE	PROJECT NO.	YEAR	SHEET NO.	TOTAL SHEETS
KANSAS	472-84692	2013	67	193

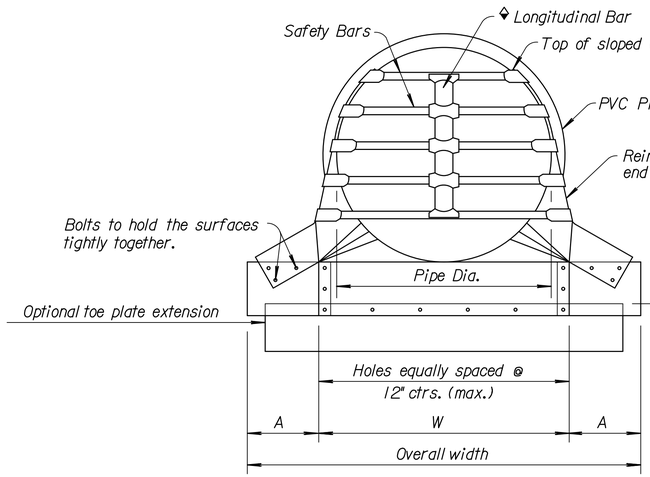

FRONT ELEVATION PVC PIPE

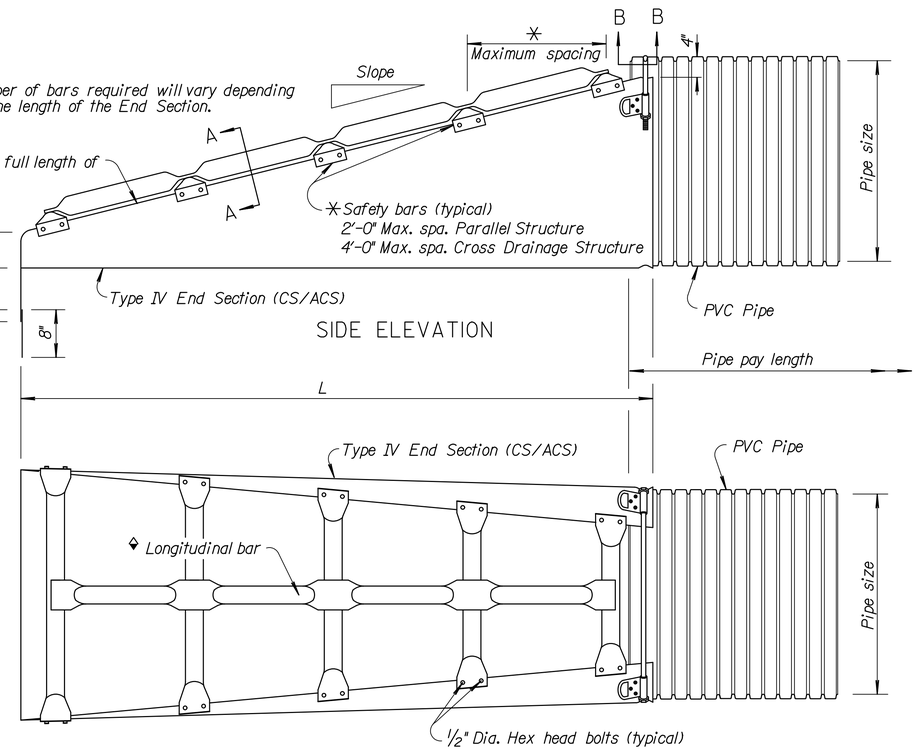

SIDE ELEVATION

PLAN

GENERAL NOTES

The culvert type shall meet the KDOT Pipe Policy & Standard Specifications.

The size of pipe designated on the plan shall be the nominal inside diameter of a two wall corrugated PVC pipe.

PVC pipe shall be joined with an integral bell gasket joint and Flexible Elastomeric Seals. PVC Pipe is available in lengths of 2.5' to 20'. PVC pipe can be field cut to length, cut through a corrugation valley using a hand or power saw. Gaskets are shipped loose and fitted on spigot/cut pipe end following Manufacturer's installation instructions.

No additional payment shall be made for any gain in length due to the fit of the pipe at connections.

All corrugated PVC pipe, end sections and fittings shall conform with the Standard Specifications.

See Standard Specifications for PVC Pipe bedding and backfill.

Multiple panel end sections shall have lap seams which are to be tightly joined by bolts & nuts. Corner plate and toe plate to be same gauge and material as end section. When required optional toe plate extension shall be overall width less 6" x 8" high.

Safety bars shall be fabricated from steel pipe meeting the requirements of ASTM A-53 Schedule 40 Specifications. Safety bars shall be hot dipped galvanized after fabrication.

Type IV End Section attachment to PVC pipe shall be made with Type 2 Connector.

All work and materials required for construction and installation of safety slope end section shall be included in the bid item "End Section (Type IV)".

TYPE IV END SECTIONS (CS or ACS) FOR PVC PIPE

Pipe Dia. (In.)	Min. Gauge Ends	Dimensions + or - 2"				L Dimensions + or - 2"			
		A	H	W	Overall Width	Slope	Length (In.)	Slope	Length (In.)
30"	12	12	9	36	60	4:1	80	6:1	120
36"	12	12	9	42	66	4:1	104	6:1	156

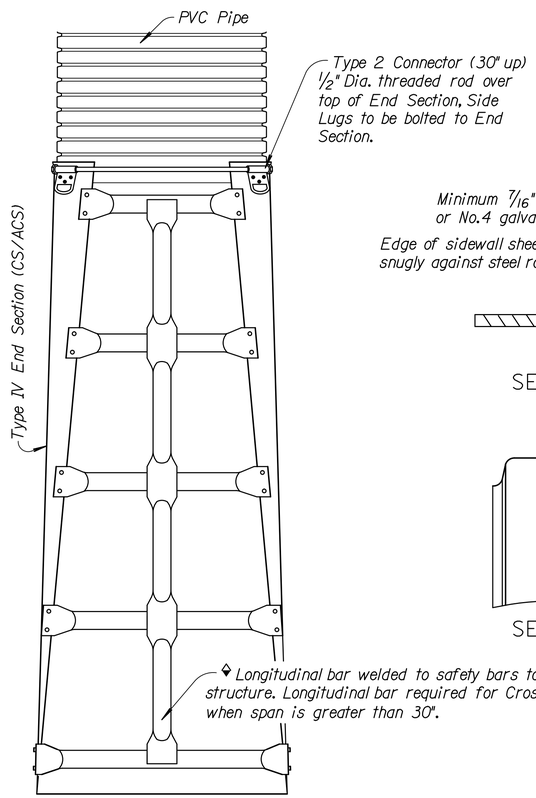

TYPE 2 CONNECTOR DETAILS

Note: Bars shown are for Cross Drainage Structures.

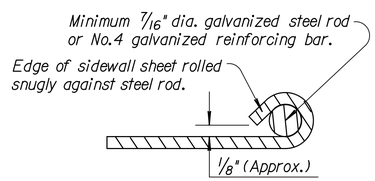

SECTION A-A

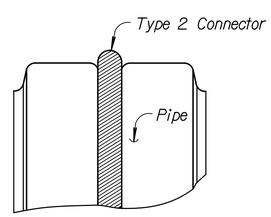

SECTION B-B

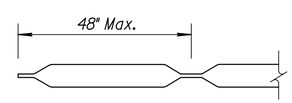

LONGITUDINAL BAR DETAIL

Longitudinal bar required for cross drainage structures when span is greater than 30".

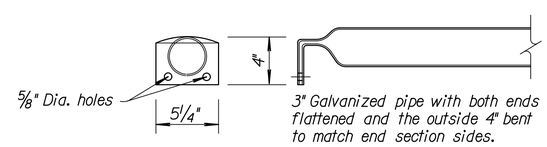

DETAIL OF SAFETY BAR
(Optional)

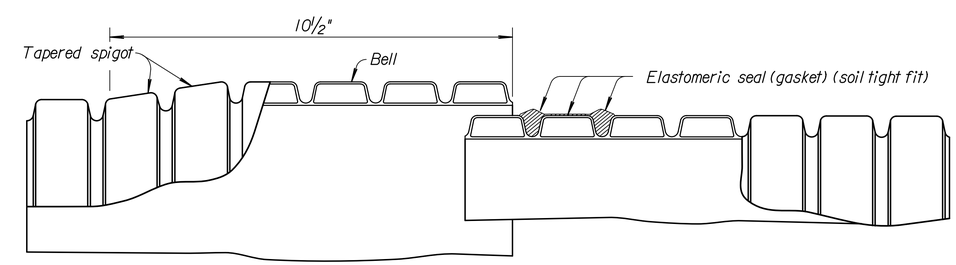

PVCP BELL & SPIGOT CONNECTION
SOIL TIGHT JOINT

Note to Designer: KDOT Pipe Policy provides guidance in identifying the prohibited and/or restricted uses of CSP, ACSP, PEP, PVCP, CAP & RCP. Provide end sections of the same type and coating as the pipe. Exceptions to this are noted in the Standard Specifications. Refer to the KDOT Design Manual, Volume I (Part C), Road Section, "Elements of Drainage & Culvert Design" for structural pipe design information which includes: corrugations, sizes, gauges, maximum/minimum fill heights and classes of pipe.

Drawn By : svb
File : I:\2008\08207\Standards\08207-rd667c.dgn
Plotted : 8/4/2013

NO.	DATE	REVISIONS	BY	APP'D
1	2-8-08	Added ref. to KDOT pipe policy	S.W.K	J.O.B

KANSAS DEPARTMENT OF TRANSPORTATION

TYPE IV END SECTION
FOR
PVC PIPE

RD667 C

FHWA APPROVAL		APP'D. James O. Brewer	
DESIGNED	DETAILED	QUANTITIES	TRACED Bowser
DESIGN CK.	DETAIL CK.	QUAN.CK.	TRACE CK. King