STATE	PROJECT NO.	YEAR	SHEET NO.	TOTAL SHEETS
KANSAS	472-85066	2014	223	388

** ORIGINAL DESIGN DATA
Constructed under Project No. 96-87 K-4434-03
Sta. 541+00
(For Information Only)

BUTTERFLY SIGN SUPPORT DETAILS **				
Design Number	"X"	Arm Length	"N"	Footing
1	20'-0"	6'-0"	0	E
Existing Serial Number = 087S137				

21st St	1/2
Greenwich Rd	1 1/2
Webb Rd	2 3/4

Proposed Sign
E8-1
19'-0" x 7'-6"

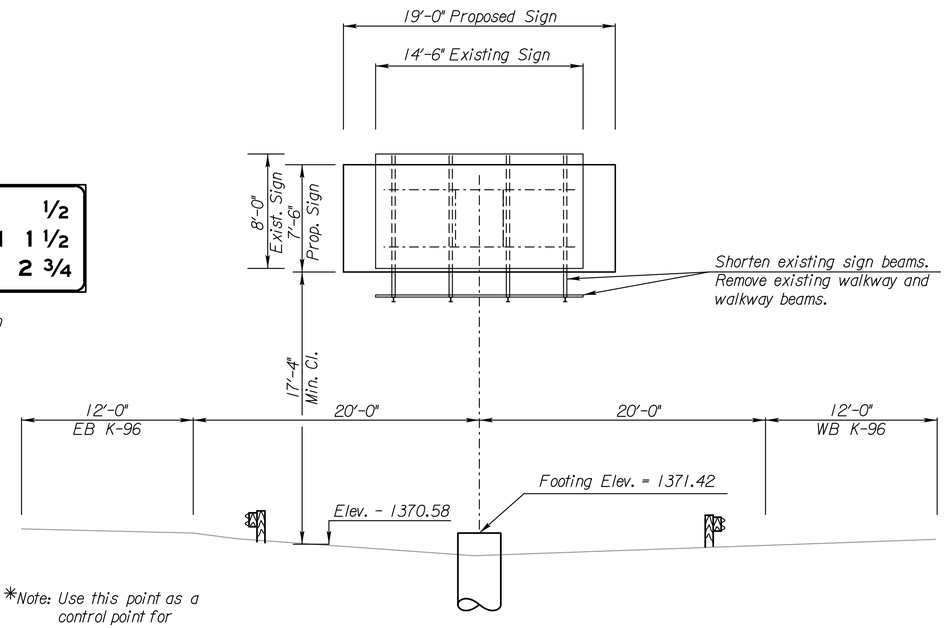

*Note: Use this point as a control point for all elevations.

ELEVATION
℄ K-96 Sta. 541+00
(Looking North)

SIGN MODIFICATION: This work shall consist of removing the existing sign panel, removing the walkway grating and walkway beams. The existing sign beams can be shortened and re-used with the new sign panel as shown on this sheet and on the "Standard Structural Sign Supports" sheets. All material not re-used shall remain the property of KDOT. All labor and material necessary to complete this work shall be paid for as per each bid item "Sign Structure Modification (Station 541+00).

Maintain the existing 17'-4" min clearance.

Dimensions: All dimensions for the existing structure are taken from the original plans and shop drawings. It shall be the Contractor's responsibility to verify these dimensions before adding the material.

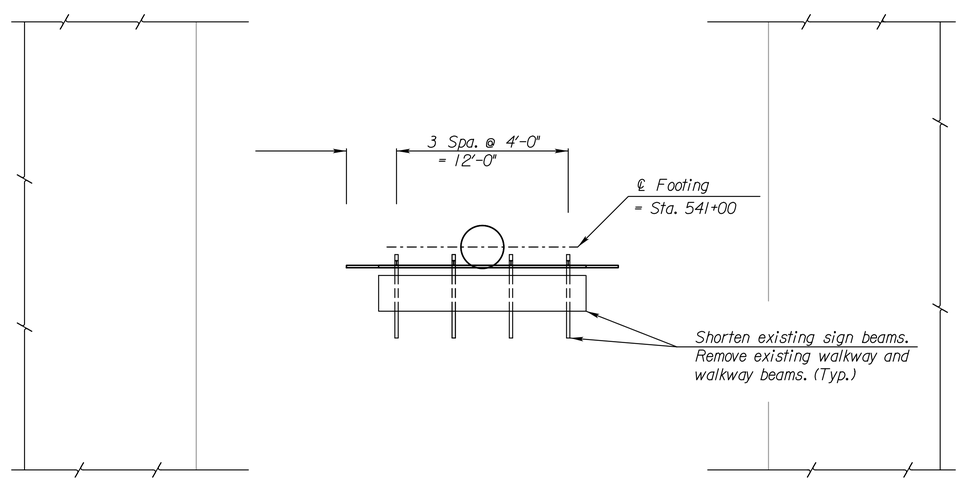

PLAN

Scale: 1" = 5'-0"

NO.	DATE	REVISIONS	BY	APP'D
3				
2				
1				

KANSAS DEPARTMENT OF TRANSPORTATION
NB K-96 Sta. 541+00
Butterfly Type Modification
Overhead Sign Structure
Construction Layout
Proj. No. 096-87 EN-3570-01 Sedgwick Co.

SHEET NO. OF	SCALE	APP'D	
DESIGNED	DETAILED	QUANTITIES	CADD
DESIGN CK.	DETAIL CK.	QUAN. CK.	CADD CK.

Plotted By: cp
Plot Location:
File: I:\2009\0952\Overhead Signing - KDOT\EN357001pbs07.dgn
Plot Date: 30-DEC-2013 16:22