FHWA REG NO.	STATE	PROJECT NO.	YEAR	SHEET NO.	SHEETS
7	KANSAS	54-87 K-4445-01	1996	16	73

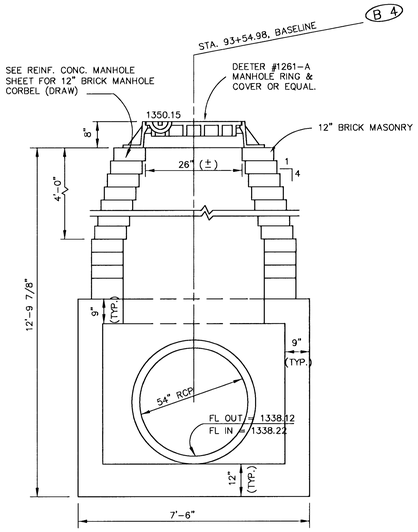

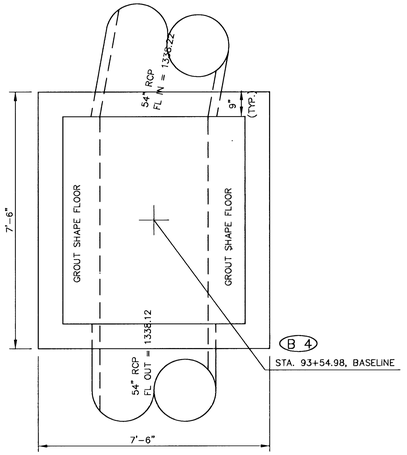

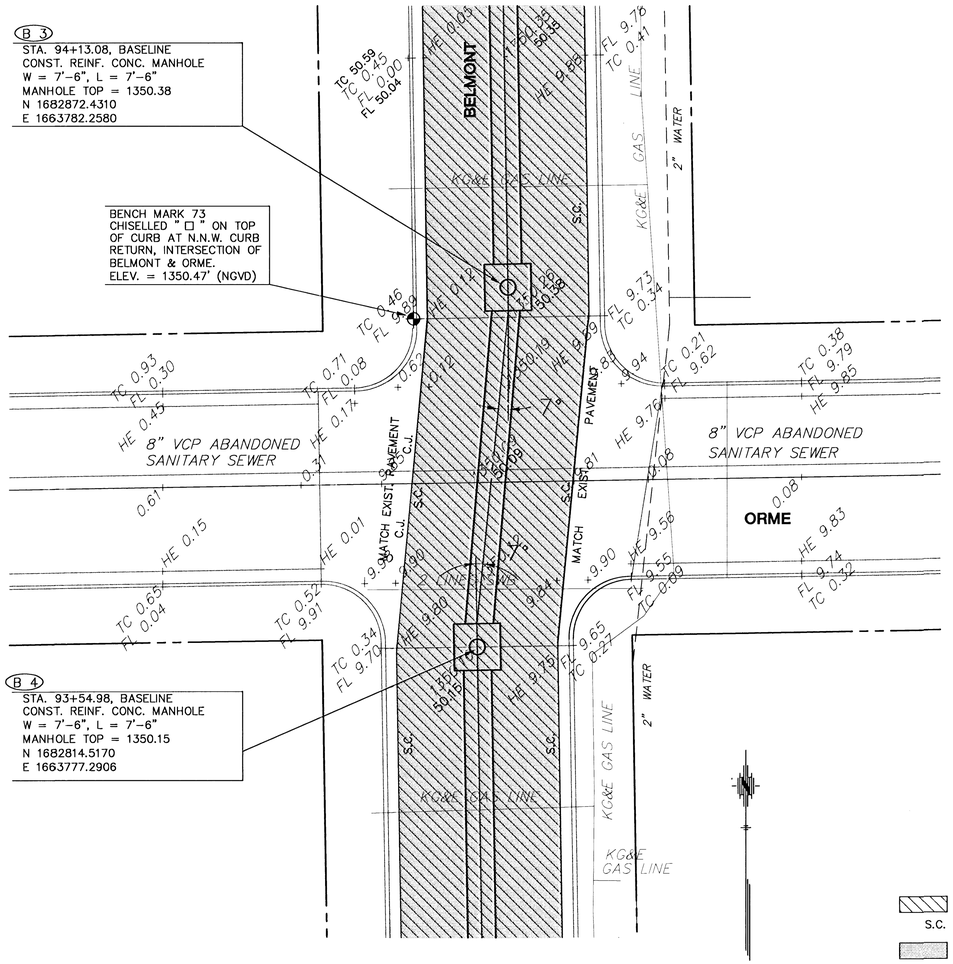

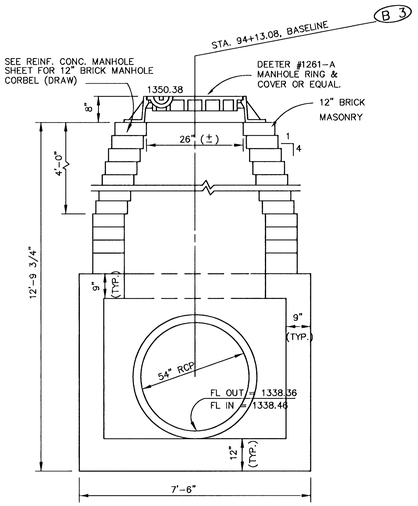

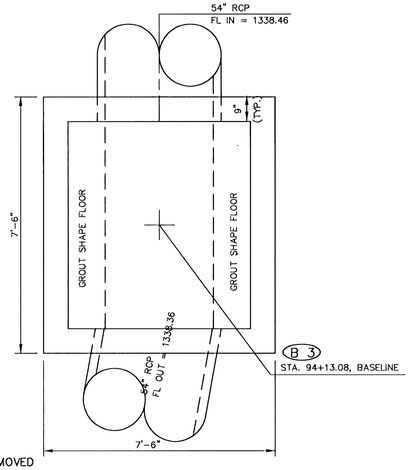

LEGEND

= PAVEMENT TO BE REMOVED

S.C. = SAW CUT (FULL DEPTH)

= ASPHALTIC CONCRETE PAVEMENT

SCALE: 1" = 10'

NO.	DATE	REVISIONS	BY	APP'D
3				
2				
1				

CITY OF WICHITA

BLUFF AREA OUTFALL

ORME & BELMONT INTERSECTION

SHEET NO.	OF	SCALE 1" = 10'		APP'D			
DESIGNED	JNJ	DETAILED	DLM	QUANTITIES	MKEC	TRACED	MKEC
DESIGN CK.	JNJ	DETAIL CK.	JNJ	QUAN.CK.	MKEC	TRACE CK.	MKEC

92070RME 5-24-96

16