| FHWA REGION NO. | STATE | PROJECT NO. | YEAR | SHEET NO. | TOTAL SHEETS |
|---|---|---|---|---|---|
| 7 | KANSAS | 87N-0116-01 | 1999 | 81 | 110 |

ARROW DISPLAY

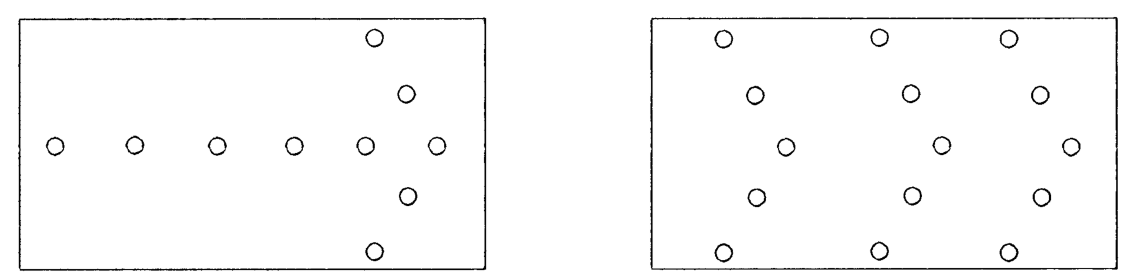

FLASHING ARROW    SEQUENTIAL CHEVRON

ARROW DISPLAY ELEMENTS SHALL BE CAPABLE OF A MINIMUM 50 PERCENT DIMMING FROM THEIR FULL-RATED LAMP VOLTAGE. FULL LAMP VOLTAGE SHOULD BE USED FOR DAY AND DIMMED MODE SHALL BE USED FOR NIGHT.

VERTICAL PANEL

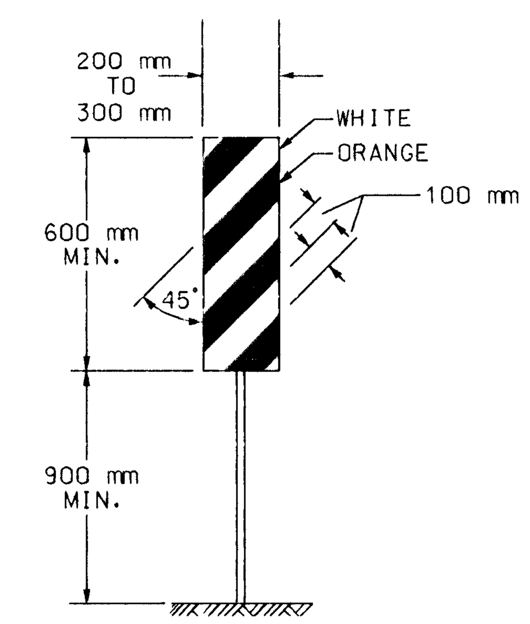


THE ENTIRE AREA OF VERTICAL PANELS SHALL BE FULLY REFLECTORIZED WITH TYPE II HIGH PERFORMANCE RETROREFLECTIVE SHEETING. VERTICAL PANELS USED ON ROADWAYS WITH A SPEED LIMIT OF 45 MPH OR GREATER SHALL HAVE A MINIMUM OF 0.175 SQ m OF RETROREFLECTIVE AREA FACING TRAFFIC.

NON-METALLIC REFLECTORIZED DRUM WITH LIGHT

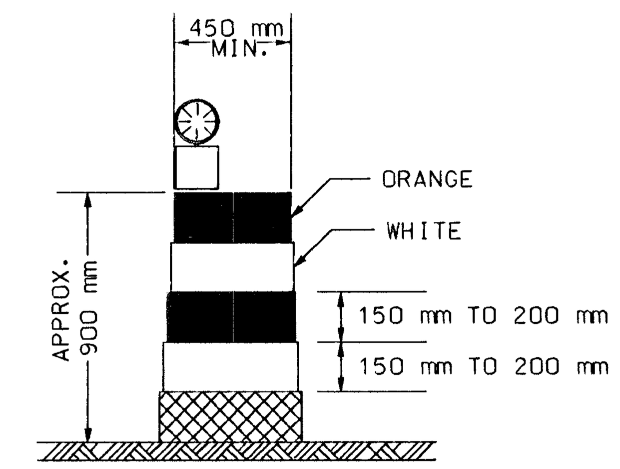


DRUMS SHALL BE REFLECTORIZED FULL CIRCUMFERENCE WITH AT LEAST TWO ORANGE AND TWO WHITE 150 TO 200 mm WIDE STRIPES OF TYPE II HIGH PERFORMANCE RETROREFLECTIVE SHEETING. ADDITIONAL ORANGE AND WHITE STRIPES MAY BE NON-REFLECTIVE. IF THERE ARE NON-REFLECTIVE SPACES BETWEEN ADJACENT STRIPES, THEY SHALL BE NO MORE THAN 50 mm WIDE.

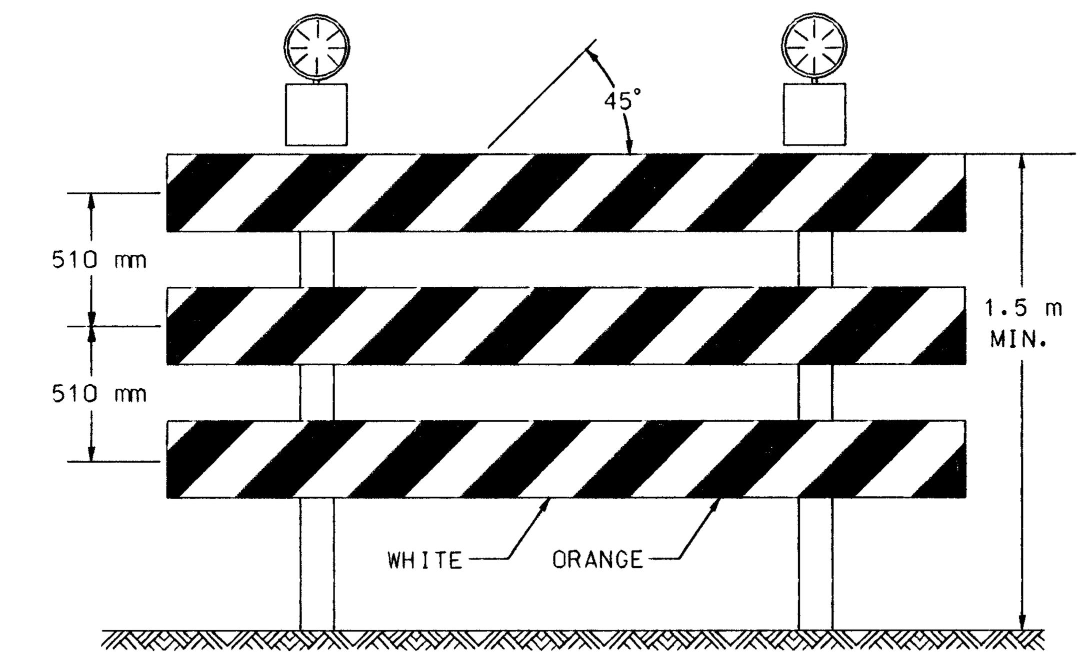


TYPE III BARRICADE
WITH LIGHTS

A MINIMUM OF TWO TYPE A LIGHTS SHALL BE USED AT EACH LOCATION WHERE A TYPE III BARRICADE OR BARRICADES ARE USED. A LIGHT SHALL BE MOUNTED ON THE OUTSIDE CORNER OF THE END BARRICADES WHEN MORE THAN ONE IS USED.

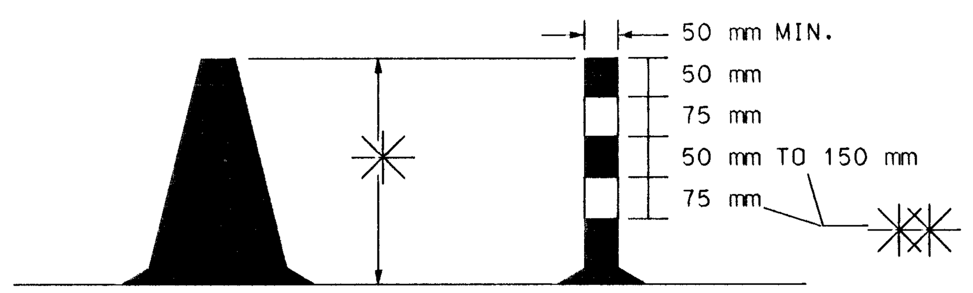


ORANGE CONES    TUBULAR MARKERS

✳ CONES AND TUBULAR MARKERS SHALL HAVE A MINIMUM HEIGHT OF 710 mm WHEN USED ON 45 MPH OR GREATER ROADWAYS. THE MINIMUM HEIGHT MAY BE REDUCED TO 450 mm ON ROADWAYS OF 40 MPH AND LOWER.

✳✳ FOR 710 mm TUBULAR MARKERS

TRAFFIC CONES MAY BE USED FOR DAYTIME OPERATIONS ONLY. IN CERTAIN SITUATIONS, SUCH AS OPEN TRENCHES, THE ENGINEER MAY REQUIRE THAT CONES BE SUPPLEMENTED BY OTHER TRAFFIC CONTROL DEVICES.

WARNING LIGHTS

WARNING LIGHTS SHALL COMPLY WITH THE CURRENT ITE PURCHASE SPECIFICATIONS FOR FLASHING AND STEADY BURN WARNING LIGHTS. THE LENS SHALL BE A MINIMUM OF 175 mm IN DIAMETER AND BE MOUNTED AT A MINIMUM HEIGHT OF 750 mm.

WARNING LIGHTS USED ON INDIVIDUAL CHANNELIZING DEVICES SHALL BE TYPE A FLASHING. THOSE USED ON DEVICES PLACED IN SERIES SHALL BE TYPE C STEADY BURN, WITH THE EXCEPTION THAT WARNING LIGHTS ARE NOT TO BE USED ON REFLECTORIZED DRUMS PLACED IN SERIES.

TYPE B HIGH INTENSITY LIGHTS ARE TO BE USED ON CONSTRUCTION WARNING SIGNS AS DIRECTED BY THE ENGINEER.

TYPE A LOW INTENSITY FLASHING WARNING LIGHTS AND TYPE C STEADY BURN WARNING LIGHTS SHALL BE MAINTAINED SO AS TO BE CAPABLE OF BEING VISIBLE ON A CLEAR NIGHT FROM A DISTANCE OF 1000 m. TYPE B HIGH INTENSITY FLASHING WARNING LIGHTS SHALL BE MAINTAINED SO AS TO BE CAPABLE OF BEING VISIBLE ON A SUNNY DAY FROM A DISTANCE OF 300 m WHEN VIEWED WITHOUT THE SUN DIRECTLY ON OR BEHIND THE DEVICE.

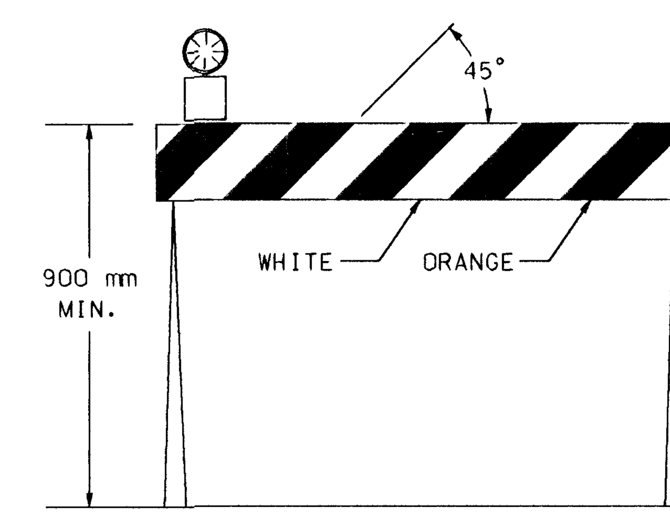


TYPE I BARRICADE
WITH LIGHT

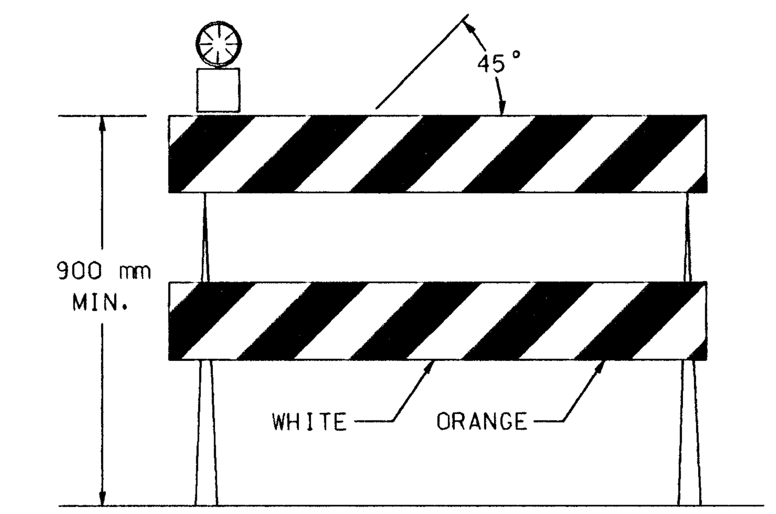


TYPE II BARRICADE
WITH LIGHT

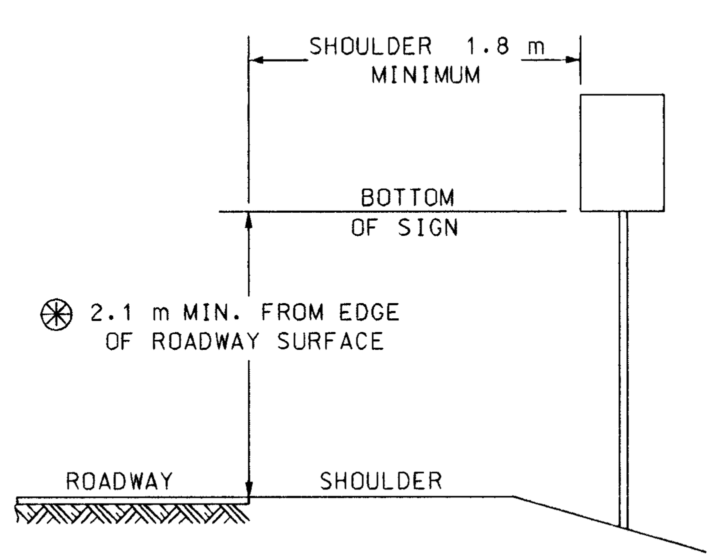


SUPPORTS USED FOR MOUNTING SIGNS OR DEVICES FOR TEMPORARY CONDITIONS SHALL BE CONSTRUCTED TO YIELD UPON IMPACT. ADDITIONAL SUPPORTS MAY BE PLACED ON THE BACK SIDE OF SIGNS IN THE FORM OF BRACING FOR RESISTING WIND CURRENTS. GUY WIRES AND TIE-DOWNS WILL NOT BE ALLOWED.

SIGNS MOUNTED ON TYPE III BARRICADES SHOULD NOT COVER MORE THAN 50 PERCENT OF THE TOP TWO RAILS OR 33 PERCENT OF THE TOTAL AREA OF THE THREE RAILS.

⊛ THE HEIGHT TO THE BOTTOM OF A SECONDARY SIGN MOUNTED BELOW ANOTHER SIGN MAY BE 2.0 m.

NOTE:

ALL TRAFFIC CONTROL DEVICES, THEIR INSTALLATION AND MAINTENANCE SHALL COMPLY WITH THE REQUIREMENTS OF THE MANUAL ON UNIFORM TRAFFIC CONTROL DEVICES FOR STREETS AND HIGHWAYS. WHENEVER THIS STANDARD CONFLICTS WITH THE MANUAL, THIS STANDARD SHALL GOVERN.

CHANNELIZING DEVICES SHALL BE PLACED FOR OPTIMUM VISIBILITY, NORMALLY AT RIGHT ANGLES TO THE TRAFFIC FLOW.

CHANNELIZING DEVICES PLACED ALONG SHOULDER EDGES OR IN DROPOFFS SHALL HAVE A MINIMUM OF 600 mm FROM THE TOP OF THE CHANNELIZING DEVICE TO THE TOP OF THE PAVEMENT.

WHERE PERMANENT OBJECT MARKERS ARE NOT ALREADY IN PLACE, ORANGE AND WHITE VERTICAL PANELS SHALL BE ERECTED TO DELINEATE EXPOSED BRIDGE ENDS.

THE FIRST MODULE OF EACH INERTIAL BARRIER SYSTEM SHALL HAVE A MINIMUM OF 0.175 SQ m OF TYPE II HIGH PERFORMANCE ORANGE RETROREFLECTIVE SHEETING FACING TRAFFIC. EITHER A VERTICALLY RECTANGULAR OR DIAMOND SHAPE MAY BE USED.

BARRICADES

| | TYPE I | TYPE II | TYPE III |
|---|---|---|---|
| WIDTH OF RAIL | 200 mm MIN-300 mm MAX | 200 mm MIN-300 mm MAX | 200 mm MIN-300 mm MAX |
| LENGTH OF RAIL | 600 mm MIN | 600 mm MIN | 1200 mm MIN |
| WIDTH OF STRIPES | 150 mm | 150 mm | 150 mm |
| HEIGHT | 900 mm MIN | 900 mm MIN | 1500 mm MIN |
| NO. OF REFL. RAIL FACES | 2 (ONE EACH DIRECTION) | 4 (TWO EACH DIRECTION) | ✳ |

✳ 3 IF FACING TRAFFIC IN ONE DIRECTION, 6 IF BOTH DIRECTIONS.

FOR WOODEN BARRICADES, NOMINAL LUMBER DIMENSIONS WILL BE SATISFACTORY.

FOR RAILS LESS THAN 900 mm LONG, 100 mm WIDE STRIPES MAY BE USED.

THE ENTIRE AREA OF BARRICADE RAILS SHALL BE FULLY REFLECTORIZED WITH TYPE II HIGH PERFORMANCE RETROREFLECTIVE SHEETING.

BARRICADES USED ON ROADWAYS WITH SPEED LIMITS OF 45 MPH OR MORE SHALL HAVE A MINIMUM OF 0.175 SQ m OF RETROREFLECTIVE AREA FACING TRAFFIC.

THE STRIPES SHALL SLOPE DOWNWARD TO THE TRAFFIC SIDE FOR CHANNELIZATION, AND TOWARD THE CENTER OF THE ROADWAY AT ROAD CLOSURES.

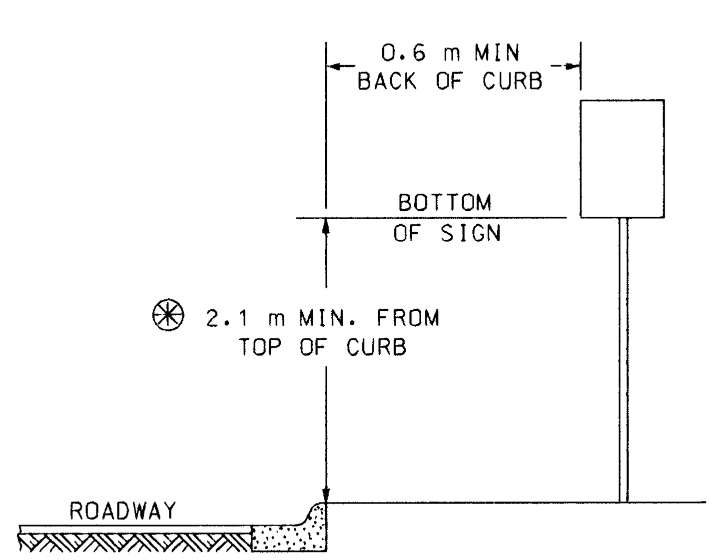


HEIGHT AND LATERAL DIMENSIONS FOR POST MOUNTED SIGNS
(ALL SIGNS LEFT IN PLACE OVERNIGHT OR LONGER)

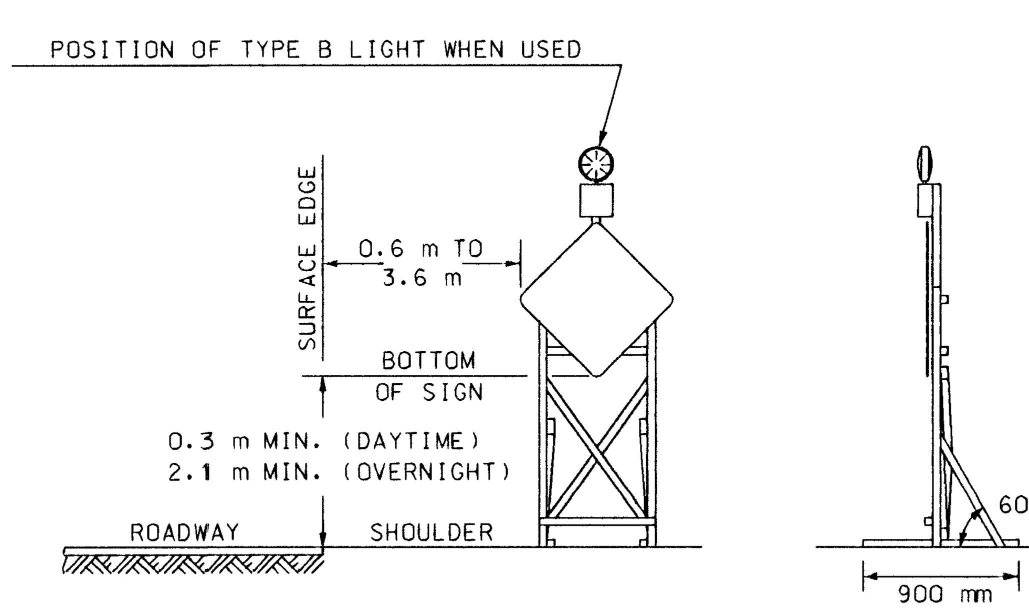


HEIGHT AND LATERAL DIMENSIONS FOR SIGNS
MOUNTED ON SKIDS OR OTHER MOVABLE MOUNTS

| NO. | DATE | REVISION | BY | APP'D |
|---|---|---|---|---|
| 3 | | | | |
| 2 | | | | |
| 1 | 7-8-96 | ADDED TO SKID MOUNTED SIGN DETAIL | WPR | NAB |

KANSAS DEPARTMENT OF TRANSPORTATION

# DESIGN DETAILS FOR BARRICADES, CHANNELIZING DEVICES AND SIGN MOUNTING LOCATIONS

TE752SI    7/1/94

| | | | |
|---|---|---|---|
| FHWA APPROVAL 8-1-96 | | APP'D Nelda A. Buckley | |
| DESIGNED PR | DETAILED PR | QUANTITIES | TRACED |
| DESIGN CK. AFT | DETAIL CK. AFT | QUAN. CK. | TRACE CK. |

Plotted By : @@USERNAME@@ Thacher Bldg., 4th Floor
Plot File : @@@@@@@@@@@@DGNSPEC@@@@@@@@@@@@@@
Plot Date : @@@@@SYTIME@@@@@@