FHWA REGION NO.	STATE	PROJECT NO.	FISCAL YEAR	SHEET NO.	TOTAL SHEETS
7	KANSAS	87-N-0223-01	2002	25	47

POWER POLE DETAILS

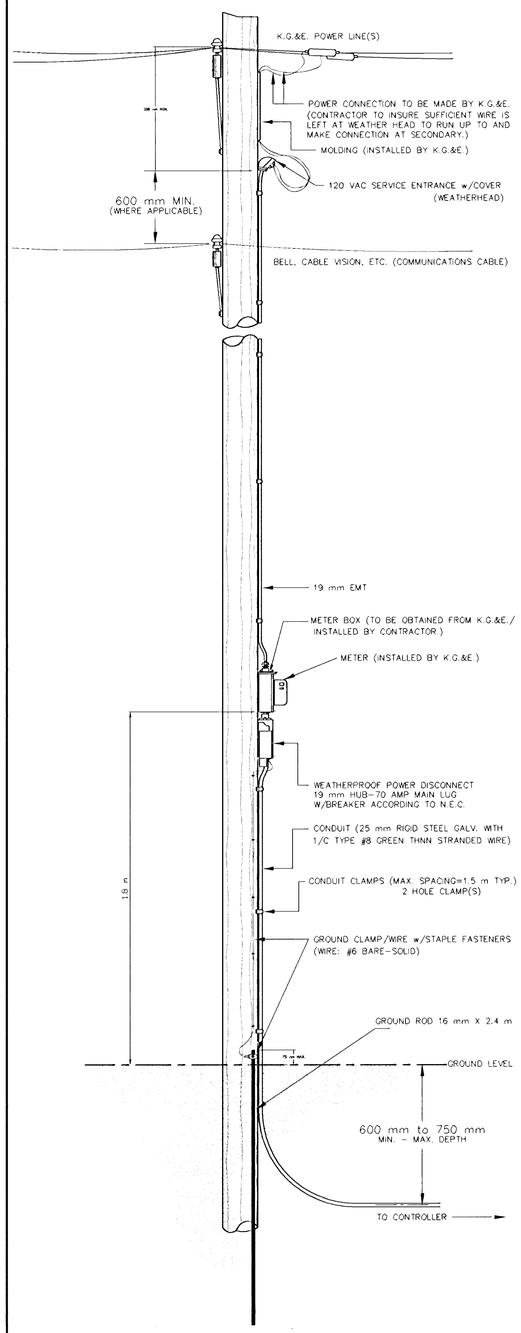

SPANWIRE ASSEMBLY DETAILS

1. MAX. SAG = 5% OF SPAN.
2. STANDARD BACKRAKE = 1.5'
3. HEIGHT OF STRAIN WIRE HOOK-UP TO BE DETERMINED BY FIELD ENGINEER. TRAFFIC SIGNAL CABLE TO BE SECURED TO STRAIN (SPAN) WIRE WEATHERABLE NYLON CABLE HANGERS (300 mm CTR.) DETAIL 'B'
4. TETHER CLAMP TO BE DESIGNED TO RELEASE UNDER 'HIGH WIND LOAD' TO PERMINT SIGNAL 'FREE SWING'.

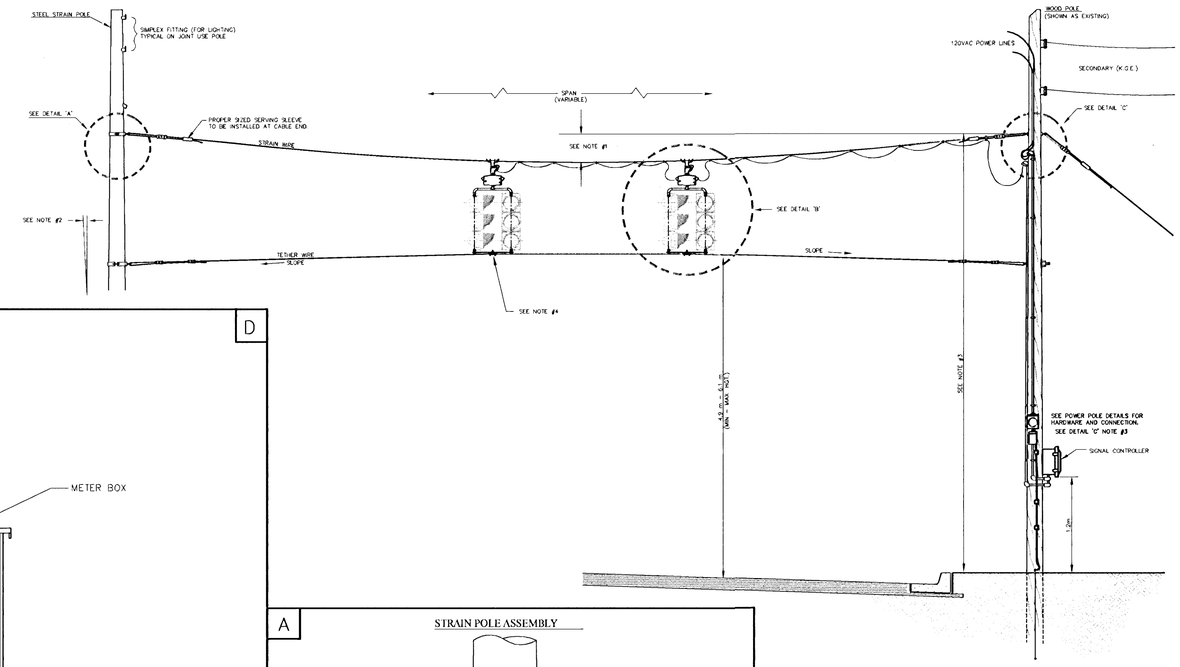

METER BOX & POWER DISCONNECT DETAILS

D

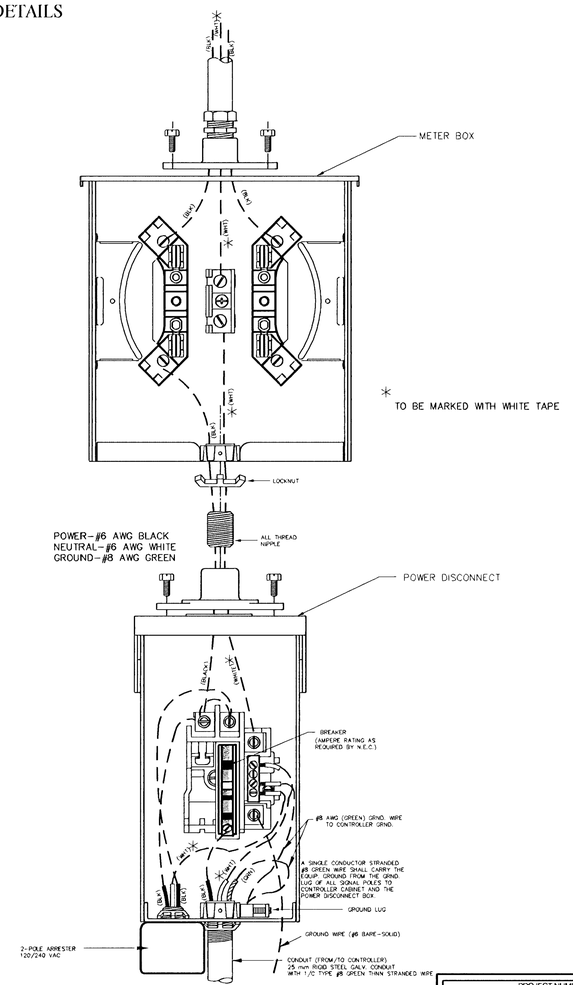

A

STRAIN POLE ASSEMBLY

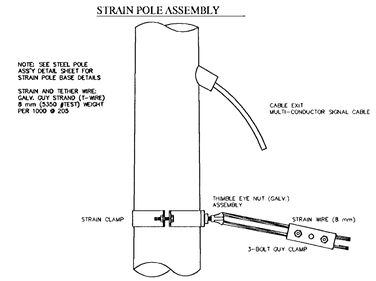

B

SIGNAL BRACKET ASSEMBLY DETAILS

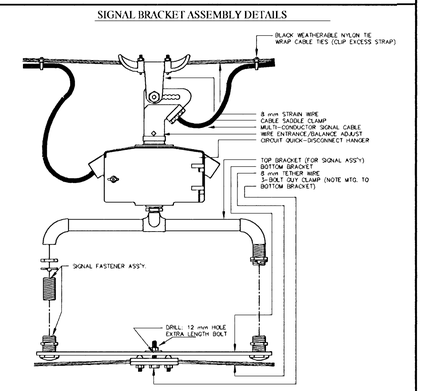

C

WOOD POLE ASSEMBLY DETAILS

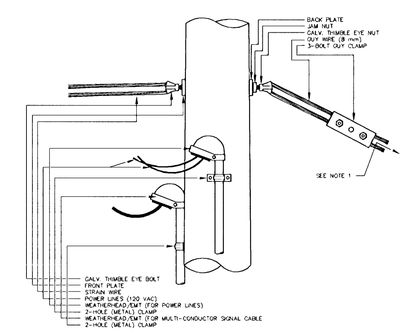

NOTE:
1. GALV. THIMBLE EYE ANCHOR BOLT AND EXPANDING ANCHOR (NOT SHOWN) TO STABILIZE WOOD POLE (WHERE APPLICABLE)
2. ANY COMBINATION OF ROUND/THIMBLE EYE BOLTS AND NUTS MAY BE UTILIZED AS APPLICATION MAY VARY. FIELD ENGINEER TO DETERMINE TYPE OF HARDWARE USED.
3. HARDWARE SHOWN IS TRANSFERRABLE TO STEEL POLE IN WHOLE OF PART WHERE STEEL STRAIN POLE IS USED. (POWER, SIGNAL CABLE, METER, ETC.) FIELD ENGINEER TO MAKE DETERMINATION. STEEL STRAIN POLE APPLICATIONS MAY VARY AS TO MOUNTING ON POLE: USE OF CLAMPS, BANDED BRACKETS, ETC. ARE STD. - FIELD ENGINEER TO DETERMINE BEST TYPE APPLICATIONS.

REV. DATE	COMMENTS	INT.

PROJECT NUMBER			SHEET NAME	ENGINEERING DIRECTORY	
472-83799			Ssp1-M	F:\\LinMcln\Traff	
DESIGN	DRAWN	APPROVED	DATE	SCALE	BAUGHMAN NO
	STAFF	STAFF	July 2003	Noen	01-03-E944

CAPITAL IMPROVEMENT PROJECT
POWER POLE AND SPAN POLE STANDARD DETAILS
LINCOLN AND MCLEAN INTERSECTION IMPROVEMENTS

BAUGHMAN COMPANY, P.A.
ENGINEERING, SURVEYING, & PLANNING
316-262-7271 * 315 ELLIS * WICHITA, KANSAS 67211

SHEET 25 OF 47