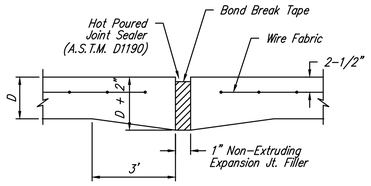

EXPANSION JOINT (E.J.)

NOTE: Extra Thickness to be Subsidiary to Price of Square Yards Pavement

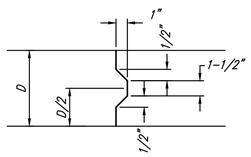

KEYWAY DETAIL

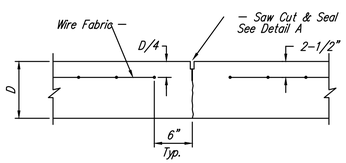

CONTRACTION JOINT DETAIL (C.J.)

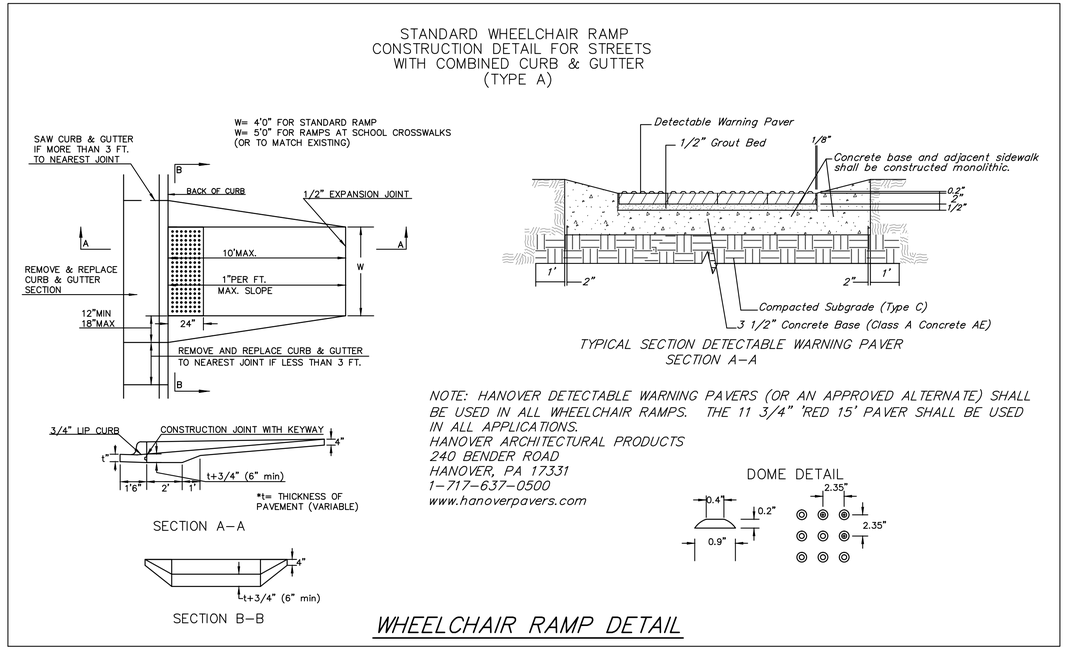

NOTE: HANOVER DETECTABLE WARNING PAVERS (OR AN APPROVED ALTERNATE) SHALL BE USED IN ALL WHEELCHAIR RAMPS. THE 11 3/4" 'RED 15' PAVER SHALL BE USED IN ALL APPLICATIONS.
HANOVER ARCHITECTURAL PRODUCTS
240 BENDER ROAD
HANOVER, PA 17331
1-717-637-0500
www.hanoverpavers.com

WHEELCHAIR RAMP DETAIL

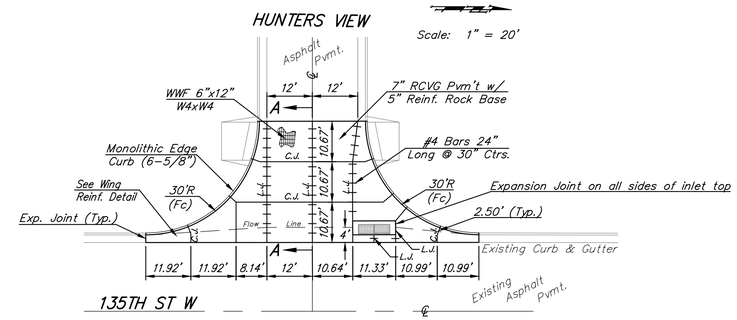

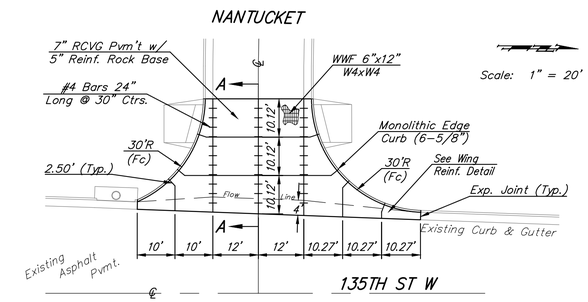

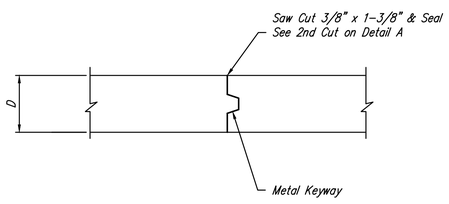

LONGITUDINAL JOINT DETAIL (L.J.) "A"

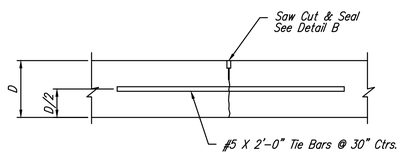

LONGITUDINAL JOINT DETAIL (L.J.) "B"

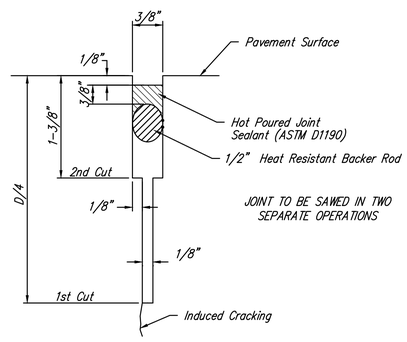

SAW JOINT DETAIL

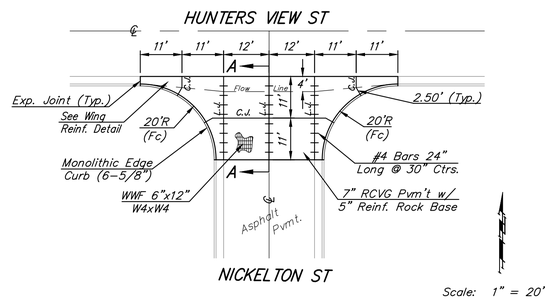

Scale: 1" = 20'

6" x 12" W4XW4 WIRE FABRIC REINFORCING SHALL BE PLACED SUCH THAT THE WIRES WITH THE 6" SPACING WILL RUN PARALLEL WITH THE LONGITUDINAL JOINT.

REINFORCED VALLEY GUTTER DETAIL

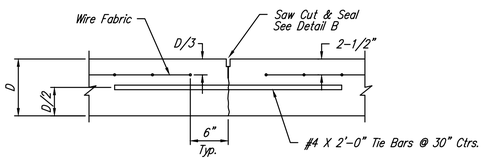

LONGITUDINAL JOINT DETAIL (L.J.)

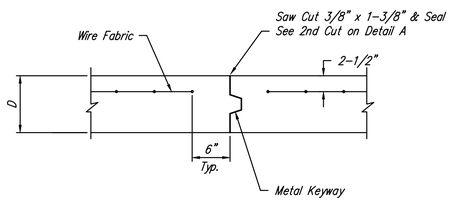

OPTIONAL CONTRACTION JOINT (CONSTRUCTION JOINT)

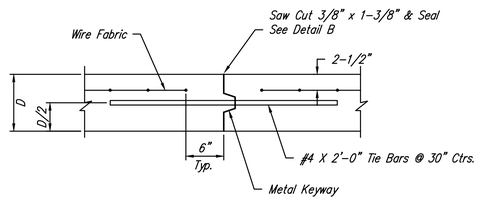

OPTIONAL LONGITUDINAL JOINT DETAIL (L.J.) (CONSTRUCTION JOINT)

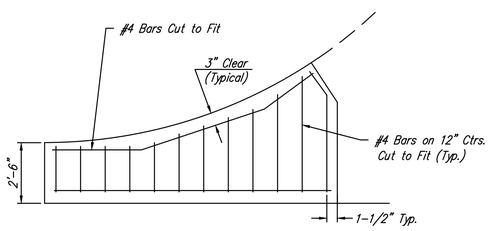

WING REINFORCING DETAIL

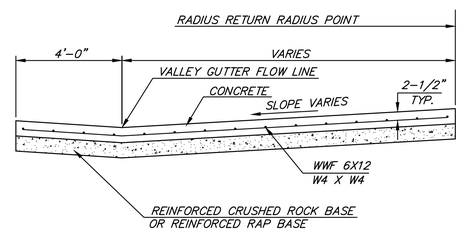

SECTION A-A

Baughman

Copper Gate 3rd Addition
VALLEY GUTTER DETAILS
WHEELCHAIR RAMP DETAILS

Baughman Company, P.A. 315 Ellis St. Wichita, KS 67211 P 316-262-7271 F 316-262-0149
ENGINEERING | SURVEYING | PLANNING | LANDSCAPE ARCHITECTURE

PROJECT NUMBER	DESIGN AEG / DRAWN JAK
REVISIONS:	APPROVED / DATE 3/28/16
	SCALE 1" = 20'
	SHEET 5 OF 32

E:\Projects\Copper Gate 3rd Addition_\Engineering\Str_15-10-E320\STR Details.dwg