Notes:

1. Inlet Top Reinforcing shall be Spaced on 150mm Max. Centers. Inlet Lids shall be Notched out as Indicated to Facilitate Construction of Curb.
2. b_3 Bar to be Field Bent to Clear Inlet Frame.

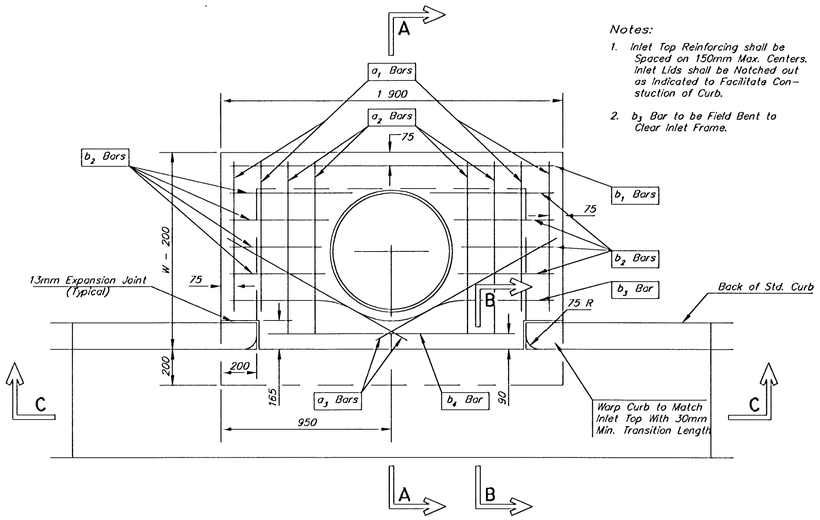

PLAN

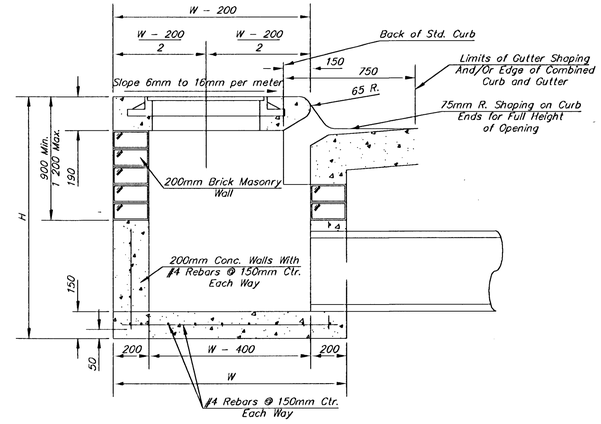

SECTION A–A

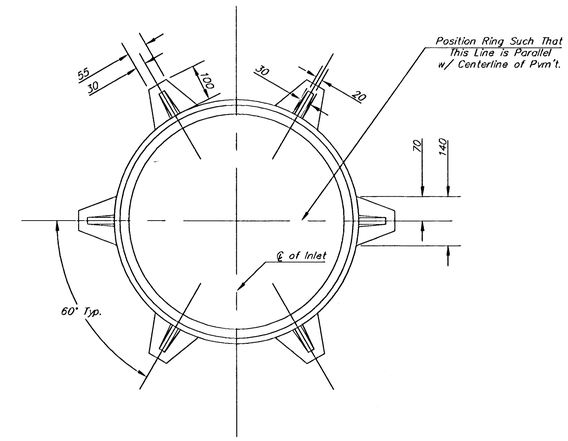

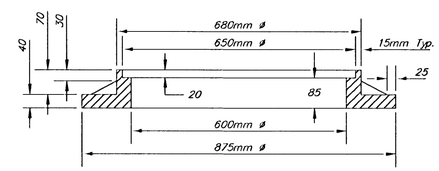

WT. = 81.7 kgs.

MANHOLE RING AND COVER

*See City of Wichita Standard Manhole Ring and Cover Detail Sheet for Cover Details to Be Used With Inlet Frame.

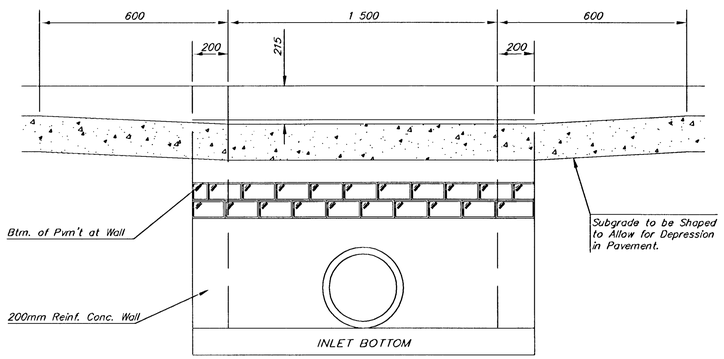

SECTION C–C

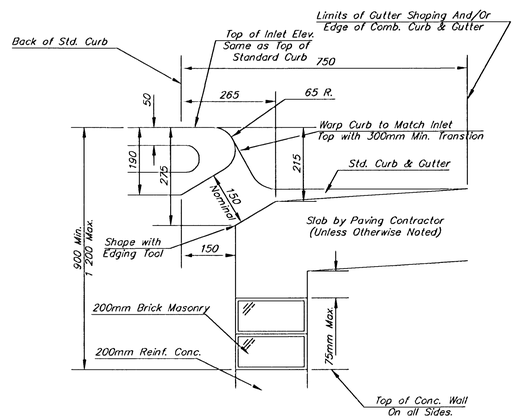

SECTION B–B

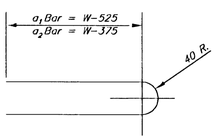

BENDING DIAGRAM

STEEL SCHEDULE

BAR		a_1	a_2	a_3	b_1 W=1 300	b_1 W=1 600	b_1 W=1 900	b_1 W=2 200	b_1 W=2 500	b_2	b_3	b_4	Wt. Kgs.
NUMBER		4	4	2	1	3	5	7	9	6	1	1	
SIZE		#4	#4	#4	#4	#4	#4	#4	#4	#4	#4	#6	
LENGTH	W=1 300	1 675	1 975	1 200	1 825	–	–	–	–	525	1 850	1 400	27±
	W=1 600	2 275	2 575	1 500	–	1 825	–	–	–	525	1 850	1 400	37±
	W=1 900	2 875	3 175	1 800	–	–	1 825	–	–	525	1 850	1 400	46±
	W=2 200	3 475	3 775	2 100	–	–	–	1 825	–	525	1 850	1 400	55±
	W=2 500	4 075	4 375	2 400	–	–	–	–	1 825	525	1 850	1 400	64±

Note: a_3 Bars to be Placed Approx. 50mm Below Top of Inlet Cover.

STANDARD CURB INLET PRECAST TOPS

W	PRE-CAST TOP SIZE	PIPE SIZE	CU. YD. CONC.
1 300	1 100 x 1 900 x 190	525mm & SMALLER	0.29±
1 600	1 400 x 1 900 x 190	600mm & 750mm	0.39±
1 900	1 700 x 1 900 x 190	900mm & 1050mm	0.49±
2 200	2 000 x 1 900 x 190	1200mm & 1350mm	0.59±
2 500	2 300 x 1 900 x 190	1500mm & 1650mm	0.69±

GENERAL NOTES

1. Concrete tops to be installed on thin mortar cushion to insure full support along brick walls. Concrete tops may be cast in place or precast. Concrete used for inlet construction shall be concrete pavement mix.
2. Contractor shall have the option of constructing 200mm brick masonry walls between the concrete inlet base and top on this inlet when W=1900mm and H=2100mm or less.
3. Inlet invert shall be shaped with 8 sack sand mix concrete to create flow channels and to increase hydraulic efficiency such that the inlet will be self cleaning between all inlet and/or outlet pipes.
4. The ends of all pipes installed in inlets shall be cut off flush with the inside face of the inlet wall.

THE CITY OF WICHITA
CITY ENGINEER'S OFFICE
CITY HALL – SEVENTH FLOOR
455 NORTH MAIN STREET
WICHITA, KANSAS 67202
(316) 268-4501
(316) 268-4114 FAX

STANDARD TYPE 1
CURB INLET
OPENING = 150 x 1 500

M. E. LINDEBAK P.E. – CITY ENGINEER

PROJECT NUMBER	INDEX CODE

DATE	
MAR 96	SHEET 16 OF 82