| STATE | PROJECT NO. | YEAR | SHEET NO. | TOTAL SHEETS |
|---|---|---|---|---|
| KANSAS | 87 N-0304-01 | 2004 | 23 | 50 |

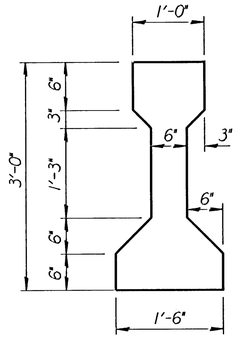


| | K2 |
|---|---|
| Area | 369 In.$^2$ |
| IcG | 50,980 In.$^4$ |
| Y Bot | 15.83 In. |
| Vol./Surf. Area | 3.37 In. |
| Wt./Ft. | 384 Lbs. |

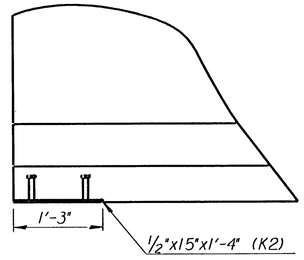


**ELEVATION**

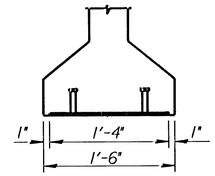


**END VIEW**

(K2 Beam)

Note: Stud welding will be in accordance with the latest edition of AWS D1.1.

Plate shall meet the requirements of ASTM A709 Grade 36. The stud anchors will be made of material as specified for Shear Connector Studs in the Standard Specifications.

The exposed surface of the bearing plate shall be galvanized.

All work and material to install the bearing plates shall be subsidiary to the bid item "Prestressed Concrete Beam".

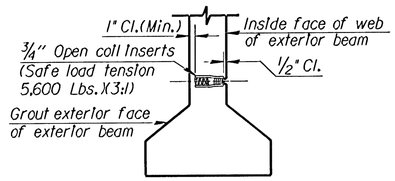


**DETAIL OF COIL INSERT**

(See Beam Detail sheet for locations)

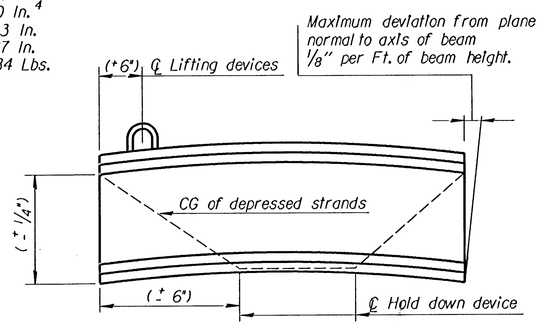


**ELEVATION**

Note: Dimensions shown in parentheses are tolerances only.

CG= Center of Gravity

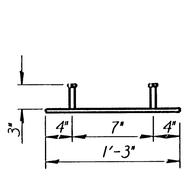


**ELEV. OF BRG. PLATE**

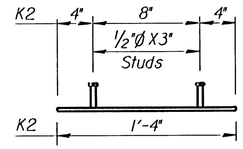


**TYPICAL SECTION**

**BEARING PLATE DETAILS**

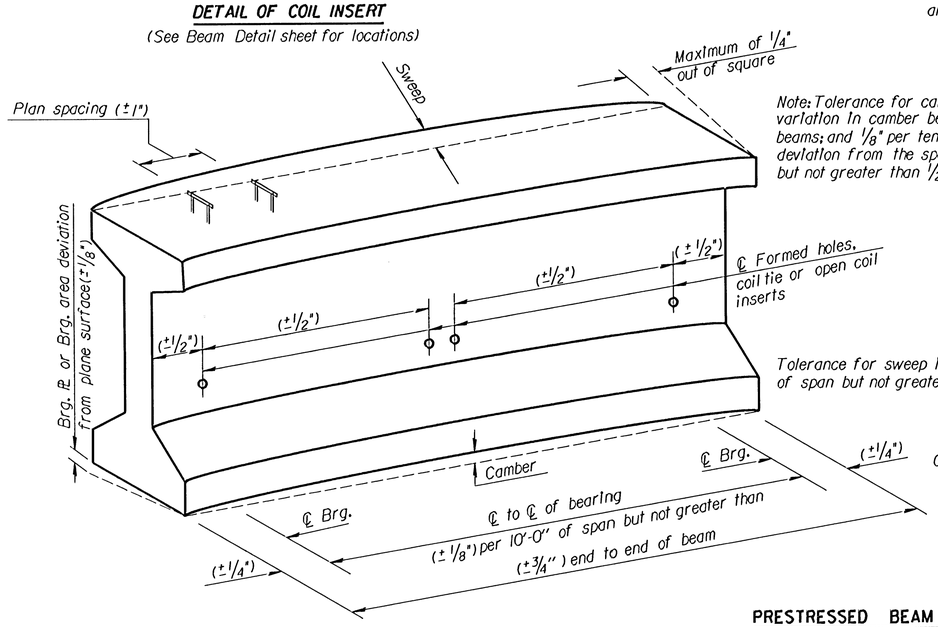


Note: Tolerance for camber is 1" maximum variation in camber between adjacent beams; and 1/8" per ten feet of span deviation from the specified camber but not greater than 1/2" deviation.

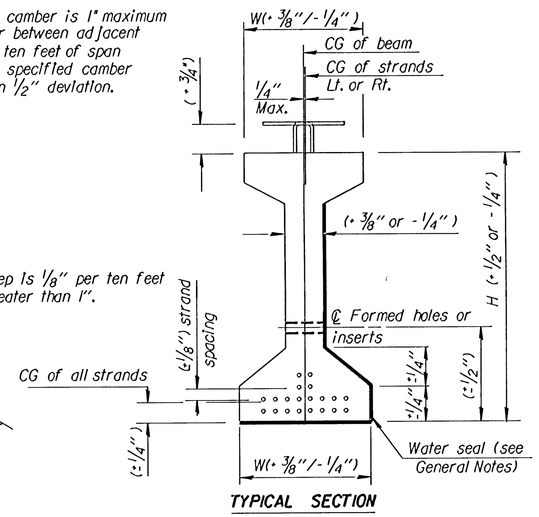


**TYPICAL SECTION**

**PRESTRESSED BEAM FABRICATION TOLERANCES**

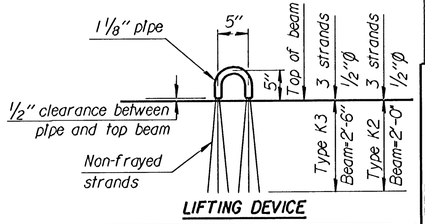


**LIFTING DEVICE**

## GENERAL NOTES

The manufacture of precast prestressed concrete beams shall conform to the Kansas Department of Transportation Specifications.

Unless otherwise noted, the ultimate compressive strength of concrete as determined by cylinder tests at the age of 28 days shall be a minimum of 5000 PSI. Concrete shall be air entrained. The mix design shall be approved by the KDOT Materials Section.

Beam lengths shown on the design plans are net lengths measured horizontally along the beam centerline. The beam manufacturer shall make necessary allowances for grade and shortening due to elastic shortening, creep and shrinkage.

The beam shall reasonably conform to the lines and dimensions shown on the design plans and be within the tolerances specified in the latest publication of AASHTO, "Tentative Standards for Prestressed Piles, Slab, I-Beams and Box Bridges and an Interim Manual for Inspection of Such Construction," except as modified by this sheet or as modified by the KDOT Specifications.

All exposed edges of beams except top and ends shall be beveled with a 3/4 inch triangular moulding or rounded to a 3/4 inch radius. The angle of intersection between web and flange shall be rounded.

Tops of beams are to be struck off level and given a wire brush or stiff broom finish, applied in the direction transverse to the length of the beam. (Note: When using precast panels for deck construction, the outside 5 inches on each side of the top flange shall be finished smooth with a steel trowel.) At approximately the time of initial set, the top of beam shall be brushed transversely with a coarse wire brush to remove all laitance.

Unless otherwise shown on the design plans, the prestressing steel shall be 1/2" nominal diameter Grade 270 "Uncoated Seven Wire Stress-Relieved Low Relaxation Strands for Prestressed Concrete" ASTM Designation A416. Minimum ultimate strength of strands shall be 41,300 pounds.

Unless otherwise shown on the design plans, ultimate compressive cylinder strength of concrete shall be 4,000 PSI mimimum before detensioning of prestressing strands.

An initial tensile force of 1,000 to 3,000 pounds shall be applied to each strand to take up any slack in the cables. Unless otherwise noted in the plans, a tensile force of 31,000 pounds shall be applied to each strand. Strands which are to be deflected shall be stressed to a magnitude such that after deflection they are tensioned to 31,000 pounds.

Trapped air holes and surface voids on the exterior face of the exterior beams shall be filled with an approved concrete masonry coating. This work shall conform to KDOT Specifications. This work shall be subsidiary to the bid item "Prestressed Concrete Beams".

Detensioning of strands shall be performed in a sequence to minimize lateral eccentricity. Method and sequence of release shall be shown on shop details. Extreme care shall be exercised in lifting, handling, storage and transportation of the beam to prevent damage. They shall be lifted by means of the device shown or by an alternate approved design. The beam shall be maintained in an upright position at all times and shall be supported on bearing points positioned below the designated lifting points or below the designated bearing points.

Beam shall have a minimum age of 28 days before placing of bridge slab. Diaphragms shall be poured as noted on the design plans.

Each beam shall have the following information stenciled by painting on the webs approximately 5 feet from beam end: date of strand release, date of concrete placement and beam mark.

Coil ties and bolts shall have an ultimate strength of 50 percent in excess of the manufacturer's safe load and shall be approved by the Engineer. Coil ties that touch prestressing strands shall be coated with an approved epoxy coating. Details will be shown on the shop details. Coil ties and bolts will not be paid for directly but shall be subsidiary to the bid item " Prestressed Concrete Beams".

Show on the shop drawings any hardware, holes or other appurtenances that are required to be incorporated into the girder to construct the girder or for any temporary works needed to construct the bridge (e.g. safety railing pockets).

Shop drawings shall be submitted in accordance with the Standard Specifications except that nine (9) sets will be required.

Elastomeric Bearing Pads shall conform to KDOT Specifications. Bearing pad and Type B expansion joint material will not be paid for directly but shall be subsidiary to the bid item " Prestressed Concrete Beams".

| NO. | DATE | REVISIONS | BY | APP'D |
|---|---|---|---|---|
| 12 | 7-1-01 | Added shop drawing note | RAM | KFH |
| 11 | 6-23-97 | Added precast panelnote | LRR | KFH |
| 10 | 3-28-97 | Delete optional brg. pl. | LRR | KFH |
| 9 | 6-5-96 | Remove btm flg open coil | LRR | KFH |
| 8 | 11-17-9 | Change material for voids | LRR | KFH |
| 7 | 9-11-95 | Emphasize concrete stress notes | LRR | KFH |

KANSAS DEPARTMENT OF TRANSPORTATION

STANDARD PRESTRESSED CONCRETE BEAM DETAILS

BR300

| | | | | | |
|---|---|---|---|---|---|
| FHWA APPROVAL | | 7-25-01 | APP'D | | KENNETH F. HURST |
| DESIGNED | | DETAILED | RGF | QUANTITIES | TRACED |
| DESIGN CK. | | DETAIL CK. | LRR | QUAN.CK. | TRACE CK. |

Std. Base File: br300.dgn
Plotted By: ras
Plot Location: $UNITS
File: i:\936/96940/002/officecheck/standards/br300.dgn
Plot Date: 2-3-2004