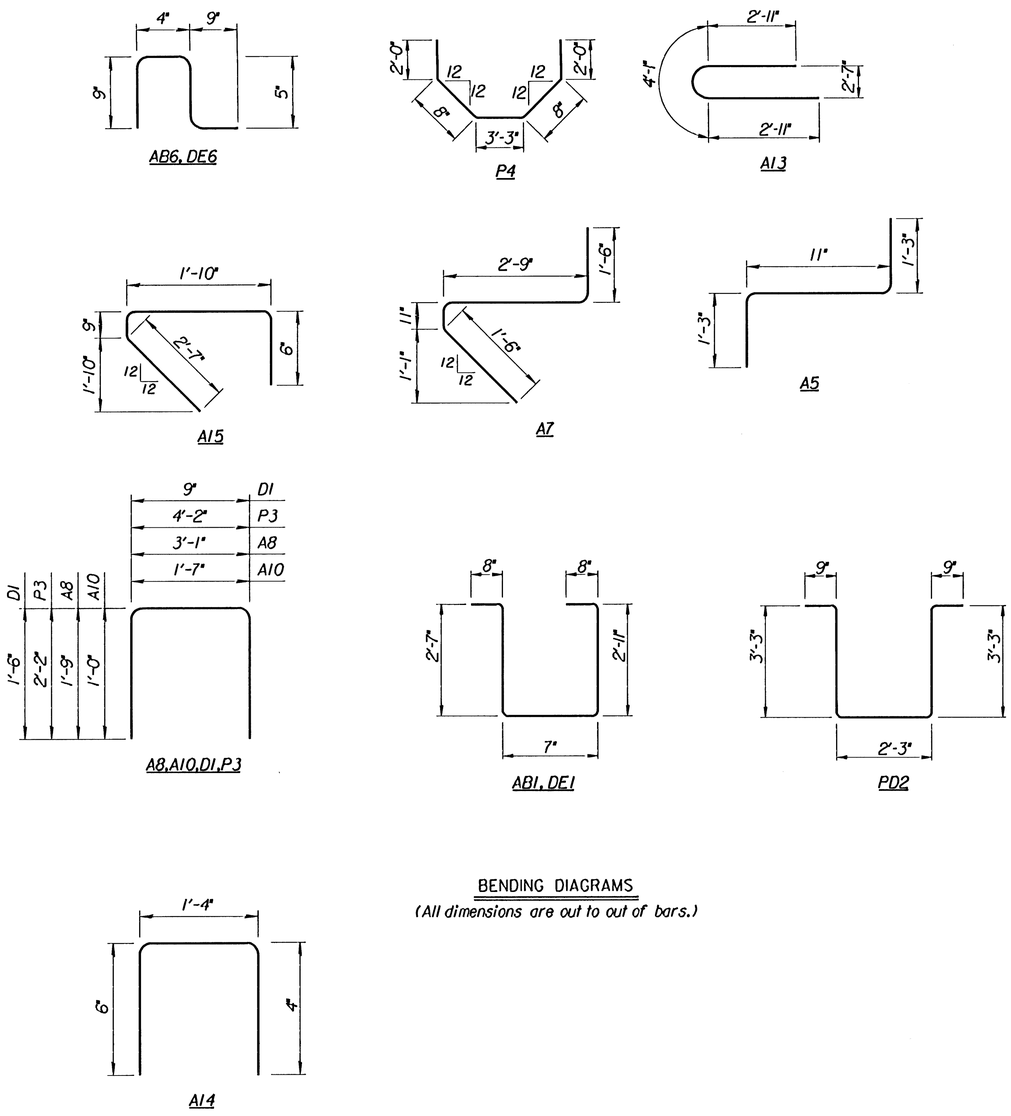

BENDING DIAGRAMS

(All dimensions are out to out of bars.)

BILL OF REINFORCING STEEL
(Grade 60)(Epoxy Coated)

	Straight Bars				Bent Bars			
	Mark	Size	Number	Length	Mark	Size	Number	Length
Abutment #1	A1	#4	2	21'-0"	A5	#4	4	3'-5"
	A2	#4	2	10'-9"	A7	#5	64	6'-8"
	A3	#5	28	32'-0"	A8	#5	64	6'-7"
	A4	#5	4	11'-3"	A10	#4	38	3'-7"
	*A6	#4	32	2'-3"	A13	#5	4	9'-11"
	A9	#6	10	32'-4"	A14	#4	24	2'-2"
	⊕A11	#5	12	6'-8"	A15	#4	42	5'-8"
	A12	#5	3	37'-2"				
	⊕A16	#5	68	7'-8"				
	⊕A17	#5	48	8'-3"				
Abutment #2	A1	#4	2	21'-0"	A5	#4	4	3'-5"
	A2	#4	2	10'-9"	A7	#5	64	6'-8"
	A3	#5	28	32'-0"	A8	#5	64	6'-7"
	A4	#5	4	11'-3"	A10	#4	38	3'-7"
	*A6	#4	32	2'-3"	A13	#5	4	9'-11"
	A9	#6	10	32'-4"	A14	#4	24	2'-2"
	A12	#5	3	37'-2"	A15	#4	42	5'-8"
	⊕A16	#5	80	7'-8"				
	⊕A17	#5	48	8'-3"				
Pier #1	P1	#5	64	3'-0"	P3	#5	32	8'-6"
	P2	#6	13	38'-0"	P4	#5	32	8'-7"
	*P5	#4	12	2'-0"				
Pier #2	P2	#6	13	38'-0"	P3	#5	32	8'-6"
					P4	#5	32	8'-7"
	*P5	#4	4	2'-0"				
Pier #3	P2	#6	13	38'-0"	P3	#5	32	8'-6"
					P4	#5	32	8'-7"
	*P5	#4	4	2'-0"				
Pier #4	P1	#5	64	3'-0"	P3	#5	32	8'-6"
	P2	#6	13	38'-0"	P4	#5	32	8'-7"
	*P5	#4	12	2'-0"				
Slab	S1	#5	980	39'-9"				
	S2	#5	72	55'-0"				
	S3	#5	72	41'-5"				
	S4	#5	36	54'-6"				
	*S5	#4	490	1'-9"				
	S6	#5	52	11'-9"				
	S7	#5	58	55'-0"				
	S8	#5	58	41'-9"				
	S9	#5	52	25'-6"				
	S10	#6	52	16'-0"				
	S11	#5	52	13'-3"				
	S12	#5	52	7'-9"				
	S13	#5	52	7'-9"				
	S14	#5	52	14'-9"				
	S15	#5	29	54'-6"				

* Dowels used in "Drill and Grout" but paid for as "Reinforcing Steel (Grade 60)"

⊕ Dowels used in "Drill and Grout" but paid for as "Reinforcing Steel (Grade 60)(Epoxy Coated)"

BILL OF REINFORCING STEEL
(Grade 60)(Epoxy Coated)

		Straight Bars				Bent Bars			
		Mark	Size	Number	Length	Mark	Size	Number	Length
Diaphragms	Abut. #1	AB2	#4	6	4'-1"	ABI	#4	32	7'-5"
		AB3	#5	24	4'-4"	AB6	#4	40	2'-3"
		*AB4	#4	8	1'-8"				
		*AB5	#4	2	1'-6"				
	Abut. #2	AB2	#4	6	4'-1"	ABI	#4	32	7'-5"
		AB3	#5	24	4'-4"	AB6	#4	40	2'-3"
		*AB4	#4	8	1'-8"				
		*AB5	#4	2	1'-6"				
	Pier #1	PDI	#5	2	38'-0"	PD2	#4	32	10'-3"
		PD3	#5	36	4'-2"				
		*PD4	#4	12	1'-8"				
	Pier #2	DE2	#4	12	4'-1"	DEI	#4	64	7'-5"
		DE3	#5	48	4'-4"	DE6	#4	80	2'-3"
		*DE4	#4	4	1'-6"				
		*DE5	#4	16	1'-8"				
	Pier #3	DE2	#4	12	4'-1"	DEI	#4	64	7'-5"
		DE3	#5	48	4'-4"	DE6	#4	80	2'-3"
		*DE4	#4	4	1'-6"				
		*DE5	#4	16	1'-8"				
	Pier #4	PDI	#5	2	38'-0"	PD2	#4	32	10'-3"
		PD3	#5	36	4'-2"				
		*PD4	#4	12	1'-8"				
	Inter.	D2	#6	120	4'-3"	DI	#4	300	3'-9"
		D3	#4	60	5'-0"				

* Dowels used in "Drill and Grout" but paid for as Reinforcing Steel (Grade 60)

No.	Revisions	By	Date
1			

CITY OF WICHITA, KANSAS
JAMES L. ARMOUR, P.E.-ACTING CITY ENGINEER
MURDOCK BRIDGE
OVER LITTLE ARKANSAS RIVER
BILL OF REINFORCING AND BENDING DIAGRAMS

CITY OF WICHITA PROJECT NO. 472-83895

Professional Engineering Consultants, P.A.
303 S. TOPEKA • WICHITA, KANSAS 67202
316-262-2691 • FAX 316-262-3003

Designed by	R.A.S.	Checked by	R.A.S.		
Drawn by	W.L.L.	Date	March 2004	Job No.	96940-2

I:/1956/96940/002/reinf.dgn
drawn by: ras
plotted by: ras 3-27-2004