STANDARD WHEELCHAIR RAMP CONSTRUCTION DETAIL FOR STREETS WITH COMBINED CURB & GUTTER (TYPE A)

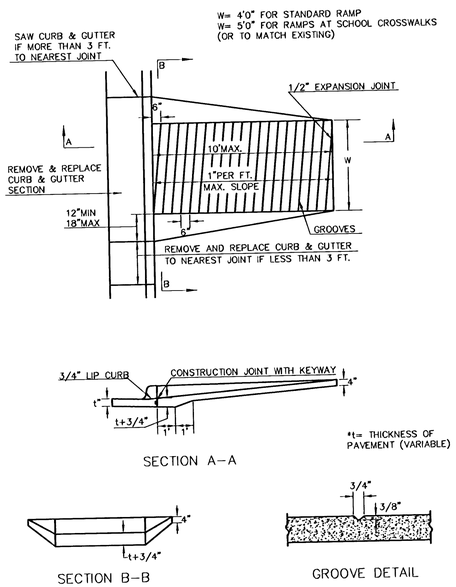

STANDARD WHEELCHAIR RAMP CONSTRUCTION DETAIL FOR CONCRETE STREETS WITH MONOLITHIC CURB (TYPE A)

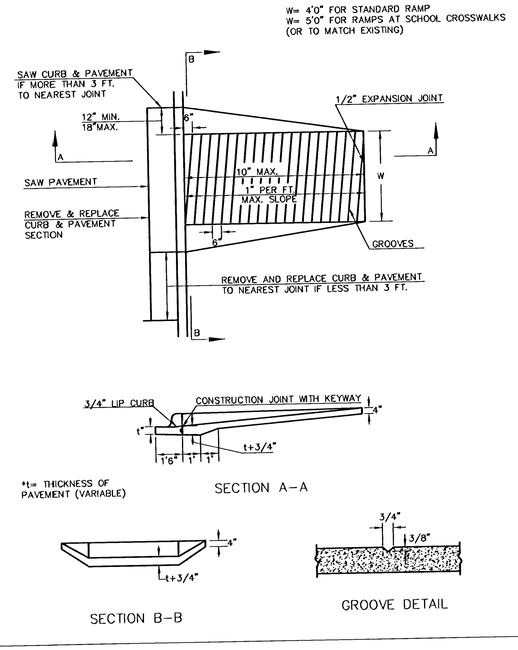

STANDARD WHEELCHAIR RAMP CONSTRUCTION DETAIL FOR STREETS WITH COMBINED CURB & GUTTER AND FULL WALK (TYPE B)

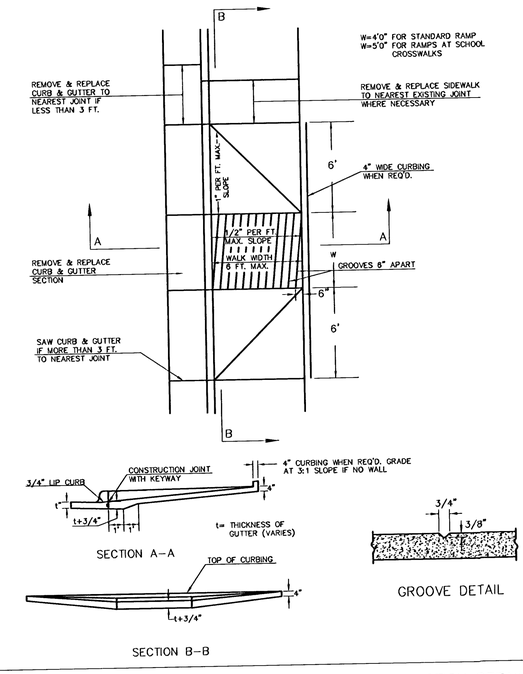

STANDARD WHEELCHAIR RAMP CONSTRUCTION DETAIL FOR STREETS WITH MONOLITHIC CURB AND FULL WALK (TYPE B)

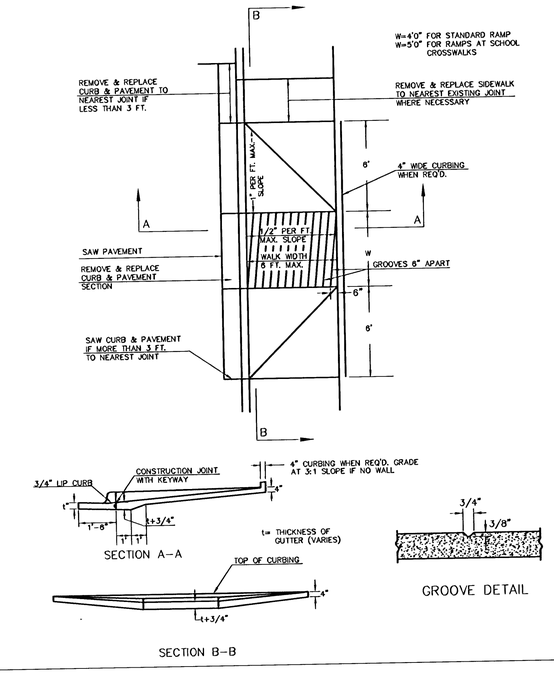

STANDARD WHEELCHAIR RAMP CONSTRUCTION DEAIL FOR STREET WITH COMBINED CURB AND GUTTER ON RADIUS WITH 6'± FROM BACK OF CURB TO PROPERTY CORNER (TYPE C)

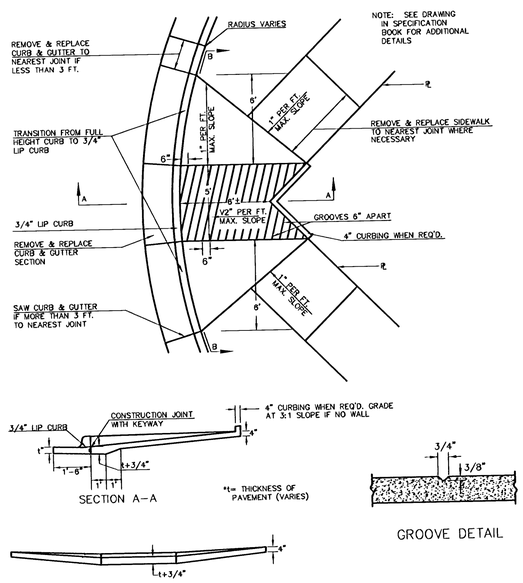

STANDARD WHEELCHAIR RAMP CONSTRUCTION DETAIL FOR STREET WITH MONOLITHIC CURB ON RADIUS WITH 6'± FROM BACK OF CURB TO PROPERTY CORNER (TYPE C)

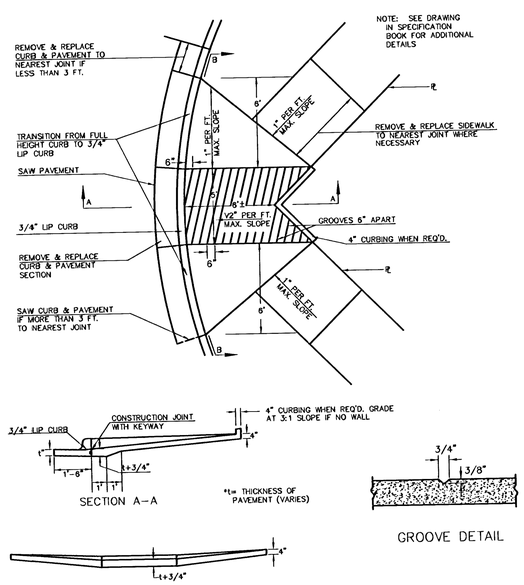

STANDARD WHEELCHAIR RAMP CONSTRUCTION DETAIL FOR STREETS WITH COMBINED CURB & GUTTER WITH ONE FULL SIDEWALK (TYPE D)

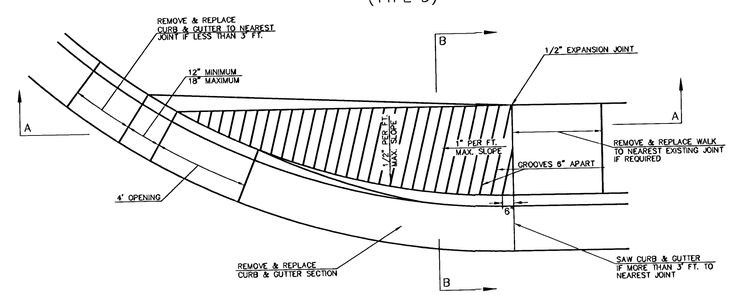

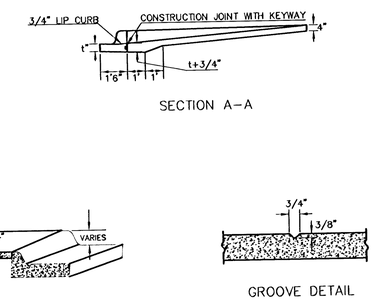

STANDARD WHEELCHAIR RAMP CONSTRUCTION DETAIL FOR STREETS WITH MONOLITHIC CURB WITH ONE FULL SIDEWALK (TYPE D)

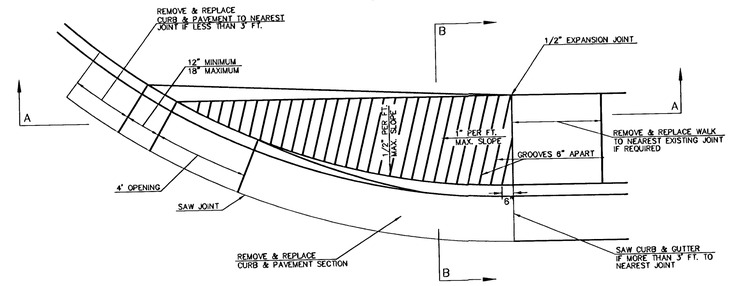

THE CITY OF WICHITA

CITY ENGINEER'S OFFICE
CITY HALL – SEVENTH FLOOR
455 NORTH MAIN STREET
WICHITA, KANSAS 67202
(316) 268-4501
(316) 268-4114 FAX

WHEELCHAIR RAMP DETAILS

M. E. LINDEBAK P.E. – CITY ENGINEER

PROJECT NUMBER	INDEX CODE
87 N-0212-01	XXXXXX
DATE MAR 96	SHEET 15 OF 59