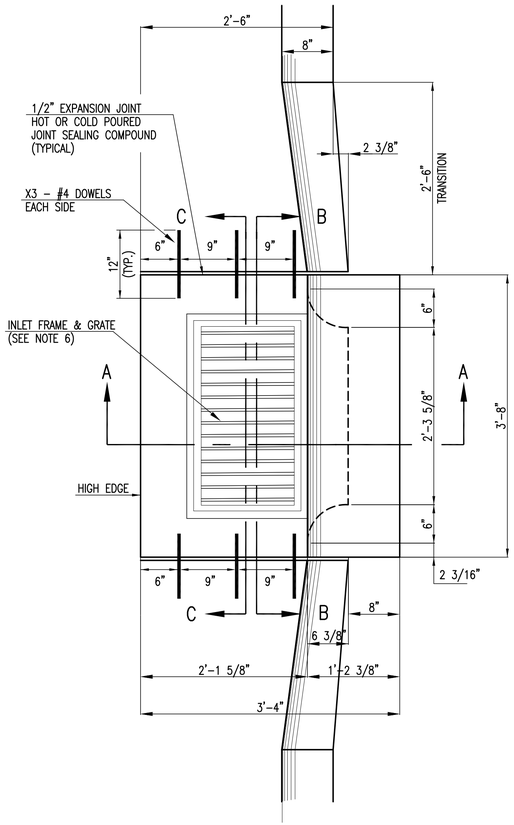

PLAN

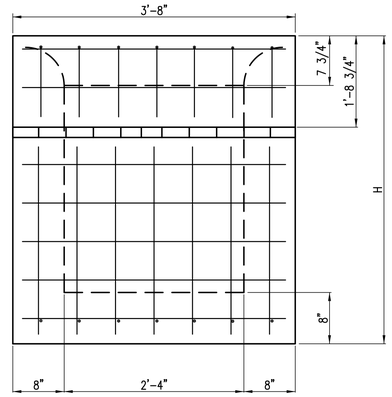

REAR WALL

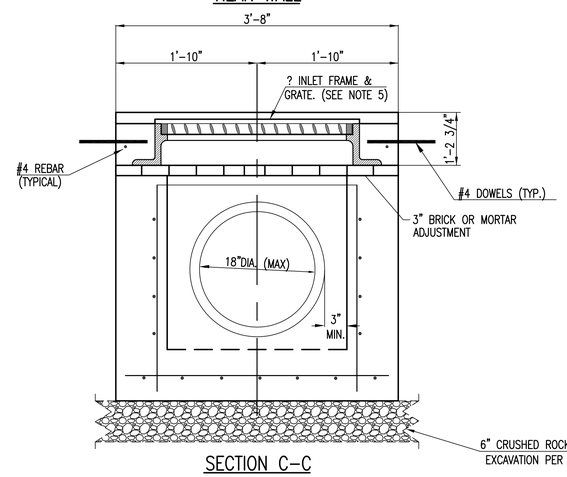

SECTION C-C

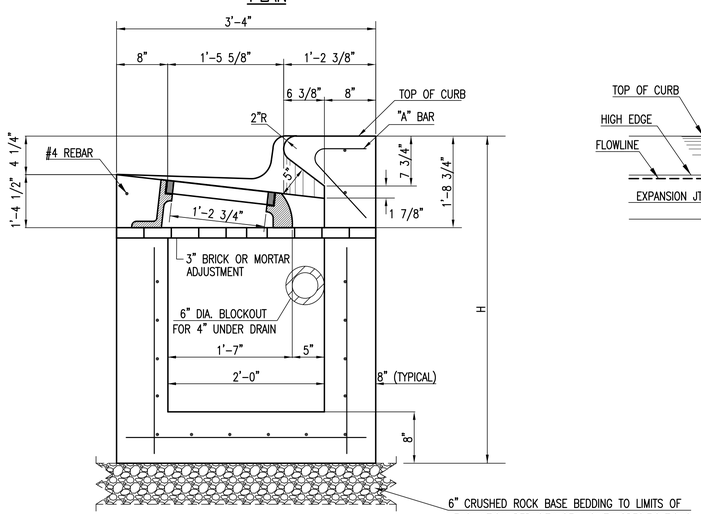

SECTION A-A

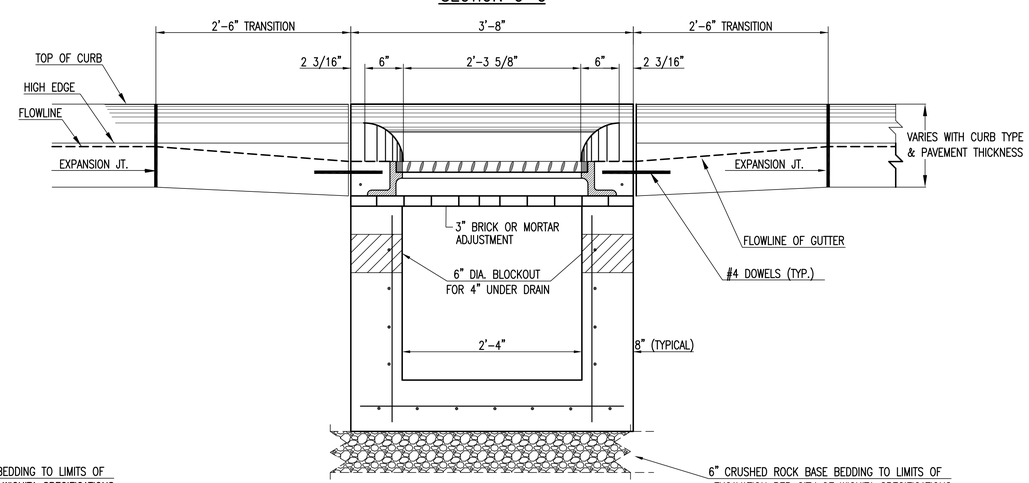

SECTION B-B

GENERAL NOTES

1. USE THE CONCRETE MIX SPECIFIED FOR THE CITY OF WICHITA CONCRETE PAVEMENT THROUGHOUT. ALL EXPOSED EDGES SHALL BE FINISHED WITH AN EDGING TOOL. REINFORCING BARS SHALL BE BENT AROUND PIPE.
2. INLET INVERT SHALL BE SHAPED WITH 8 SACK MIX CONCRETE TO CREATE FLOW CHANNELS AND TO INCREASE HYDRAULIC EFFICIENCY SUCH THAT THE INLET WILL BE SELF CLEANING BETWEEN ALL INLET AND/OR OUTLET PIPES.
3. ALL BARS ARE #4 WITH 6" SPACING AND SHALL HAVE A MINIMUM CLEARANCE OF 1 1/2 INCHES UNLESS OTHERWISE NOTED ON THE PLANS.
4. NO DEDUCTIONS WILL BE MADE IN PAY LENGTH OF CURB, GUTTER, OR CURB AND GUTTER THROUGH THE INLET AREA.
5. USE DEETER FOUNDRY, INC. CASTING NO. 2442/43 OR EJIW 7600Z LEFT SIDE, 7600 RIGHT SIDE IN INLET FRAME AND GRATE WITH STYLE H GRATE. INLET FRAME TO BE PROOF LOAD TESTED TO 40,000 LBS. ON UNSUPPORTED SIDE.
6. REINFORCING BARS SHALL BE CUT OR BENT AROUND PIPES. NO DEDUCTION IN CONCRETE QUANTITIES SHALL BE MADE FOR PIPE OPENINGS.
7. THE VANES OF THE GRATE SHALL BE ORIENTED WITH RESPECT TO THE FLOW ARROWS SHOWN ON THE PLANS.
8. CONTRACTOR SHALL REMOVE LIFTING HOOKS AFTER INSTALLATION. RECESSES IN INLET WALL SHALL BE GROUTED FLUSH TO THE INLET WALL WITH HYDRAULIC CEMENT AFTER THE INLET IS IN PLACE. LIFTING HOLES THRU THE INLET WALL WILL NOT BE ACCEPTED.

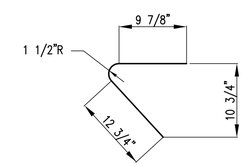

"A BAR

BENDING DIAGRAM

REVISED: MARCH 2015

CITY OF WICHITA

PUBLIC WORKS & UTILITIES
ENGINEERING DIVISION

STANDARD SINGLE
TYPE II CURB INLET

CITY ENGINEER
GARY JANZEN, P.E.

PROJECT NUMBER	OCA NUMBER	DATE
472-85239	766345	AUGUST 2016

CITY ENGINEER'S OFFICE
CITY HALL - SEVENTH FLOOR
455 NORTH MAIN STREET
WICHITA, KANSAS 67202-1620
(316) 268-4501

SHEET
13 of 30

No.	Date	By	Approved	Revision

NORTH MERIDIAN AVENUE
PAVING & DRAINAGE IMPROVEMENTS
STANDARD TYPE 2 CURB INLET
CITY OF WICHITA, KANSAS
GARY JANZEN, P.E. - CITY ENGINEER
C.O.W. Project #472-85239, O.C.A. #766345

POE & ASSOCIATES, INC.
CONSULTING ENGINEERS
544 West Douglas Avenue ▯ Wichita, KS 67203
Phone 316/685-4114 ▯ FAX 316/685-4444

JASON P. DICKMAN
18137
21 August 2016
KANSAS
PROFESSIONAL ENGINEER

FINAL

Engineer: J. DICKMAN
Designer: J. UNRUH
Dwg.: P:\102112\102112-TYPICALS
Poe Job No.: 102112
Date: AUGUST 2016

Sheet 13 of 30

SW-105