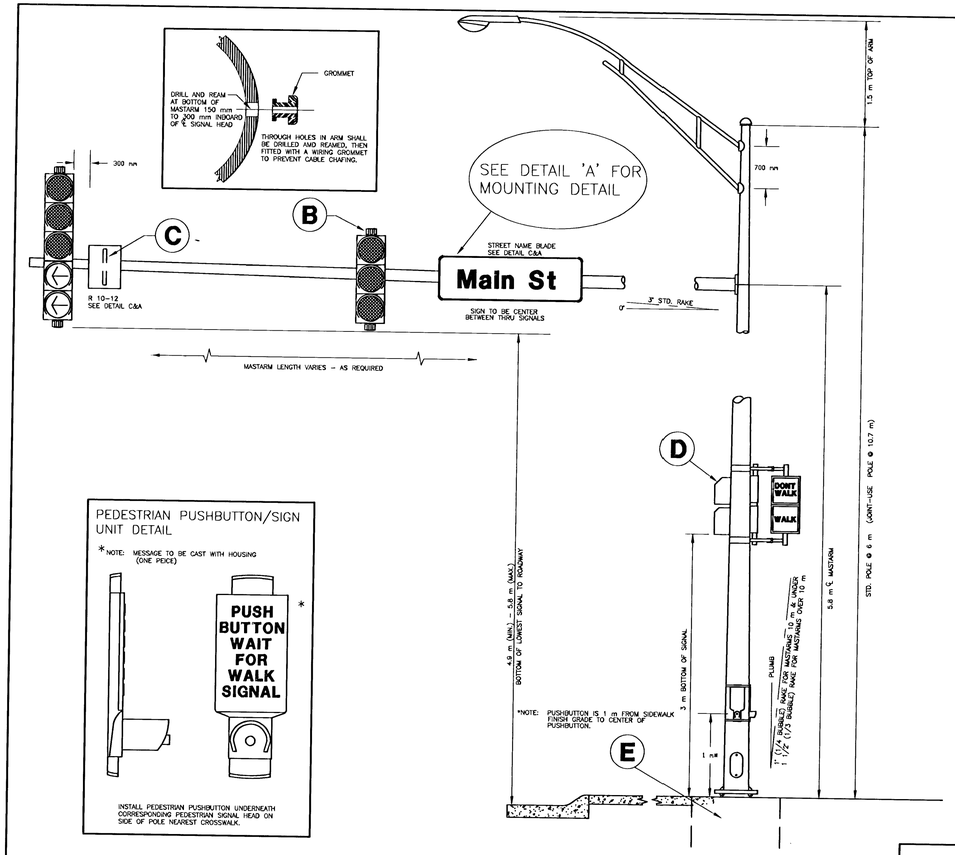

PEDESTRIAN PUSHBUTTON/SIGN UNIT DETAIL

*NOTE: MESSAGE TO BE CAST WITH HOUSING (ONE PEICE)

INSTALL PEDESTRIAN PUSHBUTTON UNDERNEATH CORRESPONDING PEDESTRIAN SIGNAL HEAD ON SIDE OF POLE NEAREST CROSSWALK.

BANDED SIGN MOUNTING BRACKET DETAIL

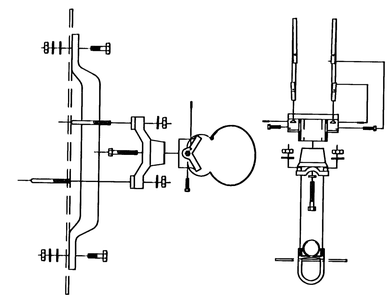

A

TYPE I SIGNAL MOUNTING BRACKET ASSEMBLY DETAIL

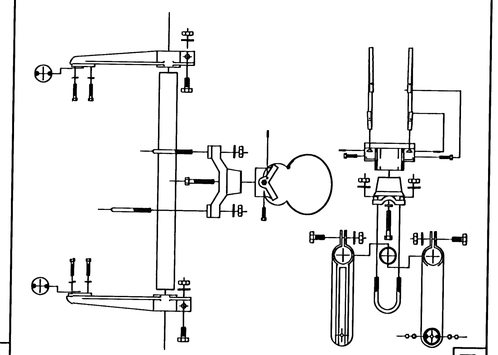

B

STANDARD SIGNING

R 10-12
600 mm x 750 mm

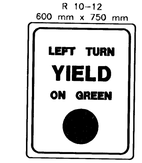

SEE DETAIL "A" FOR MOUNTING HARDWARE

1.5 m x 450 mm

Street Name

SEE DETAIL "A" FOR MOUNTING HARDWARE USE 2 PER SIGN

C

TYPE III SIDE-OF-POLE MOUNTING BRACKET ASSEMBLY

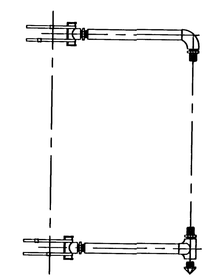

F

TYPE II SIGNAL MOUNTING BRACKET ASSEMBLY (SIDE-OF-POLE)

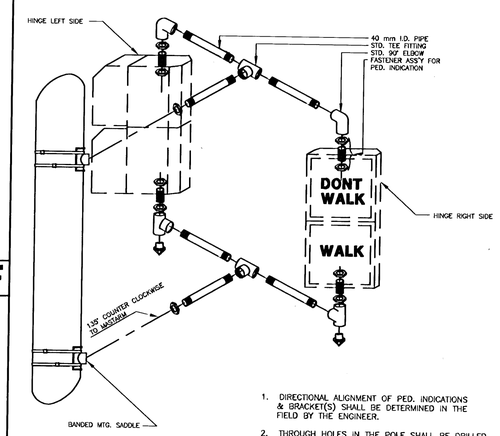

1. DIRECTIONAL ALIGNMENT OF PED. INDICATIONS & BRACKET(S) SHALL BE DETERMINED IN THE FIELD BY THE ENGINEER.
2. THROUGH HOLES IN THE POLE SHALL BE DRILLED AND WELL REAMED TO PREVENT CABLE CHAFING.
3. HINGE PEDESTRIAN SIGNAL DOORS AWAY FROM POLE.

D

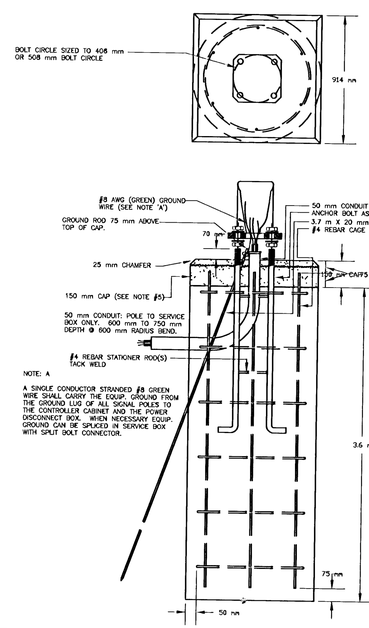

NOTE: A

A SINGLE CONDUCTOR STRANDED #8 GREEN WIRE SHALL CARRY THE EQUIP. GROUND FROM THE GROUND LUG OF ALL SIGNAL POLES TO THE CONTROLLER CABINET AND THE POWER DISCONNECT BOX. WHEN NECESSARY EQUIP. GROUND CAN BE SPLICED IN SERVICE BOX WITH SPLIT BOLT CONNECTOR.

NOTE:

1. THE ANCHOR BOLTS FOR THE SIGNAL POLE SHALL BE TACK WELDED TOGETHER IN A 400 OR 500 mm DIA. BOLT PATTERN (ON CENTERS AS SHOWN) TO MAINTAIN REQUIRED BOLT CONFIGURATION PATTERN AND TO AID IN VERTICAL POSITIONING WHILE CONCRETE BASE IS POURED.
2. USE ANTI-SEIZE COMPOUND ON ALL THREADS.
3. 3.7 m x 20 mm GROUND ROD TO BE POSITIONED BEFORE POURING BASE.
4. CLASS 'A' CONCRETE SHALL BE USED TO CONSTRUCT BASE.
5. CONSTRUCT A 150 mm THICK x 914 mm SQUARE CONCRETE CAP AFTER POLE HAS BEEN ERECTED & PLUMBED. CHAMFER EDGE 25 mm. MUST BE APPROVED BY ENG. BEFORE POURED.
6. CONDUIT SHALL HAVE PLASTIC (OR METAL) BUSHING (ABOVE BASE) TO PREVENT CABLE CHAFING.
7. USE #8 BARE COPPER GROUND CONDUCTOR FROM CLAMP TO GROUND BOLT IN ACCESS HOLE.

REBAR CAGE

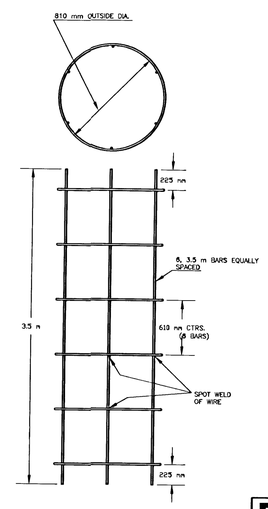

E

PROJECT DESCRIPTION		
STEEL SIGNAL POLE ASSEMBLY DETAILS		
PROJECT NUMBER		
DRAWN BY: T.M.	APPROVED BY	REVISED BY: T.M.
DATE: FEB. 96		DATE: MAY97
CITY OF WICHITA DEPARTMENT OF PUBLIC WORKS		
DIVISION OF TRAFFIC ENGINEERING		SCALE
WM. G. McKINLEY TRAFFIC ENGINEER		NO SCALE

I:\LIBRARY\CIVIL\PAVE\WICHITA\SIGNAL\SSP-MET 5-20-97 9:41:44 am CST

G:\CIVIL\9257\DWG\SIGNAL\SSP-MET.DWG Fri Oct 19 09:51:56 2001