STATE	PROJECT NO.	YEAR	SHEET NO.	TOTAL SHEETS
KANSAS	87 N-0230-01	2003	14	73

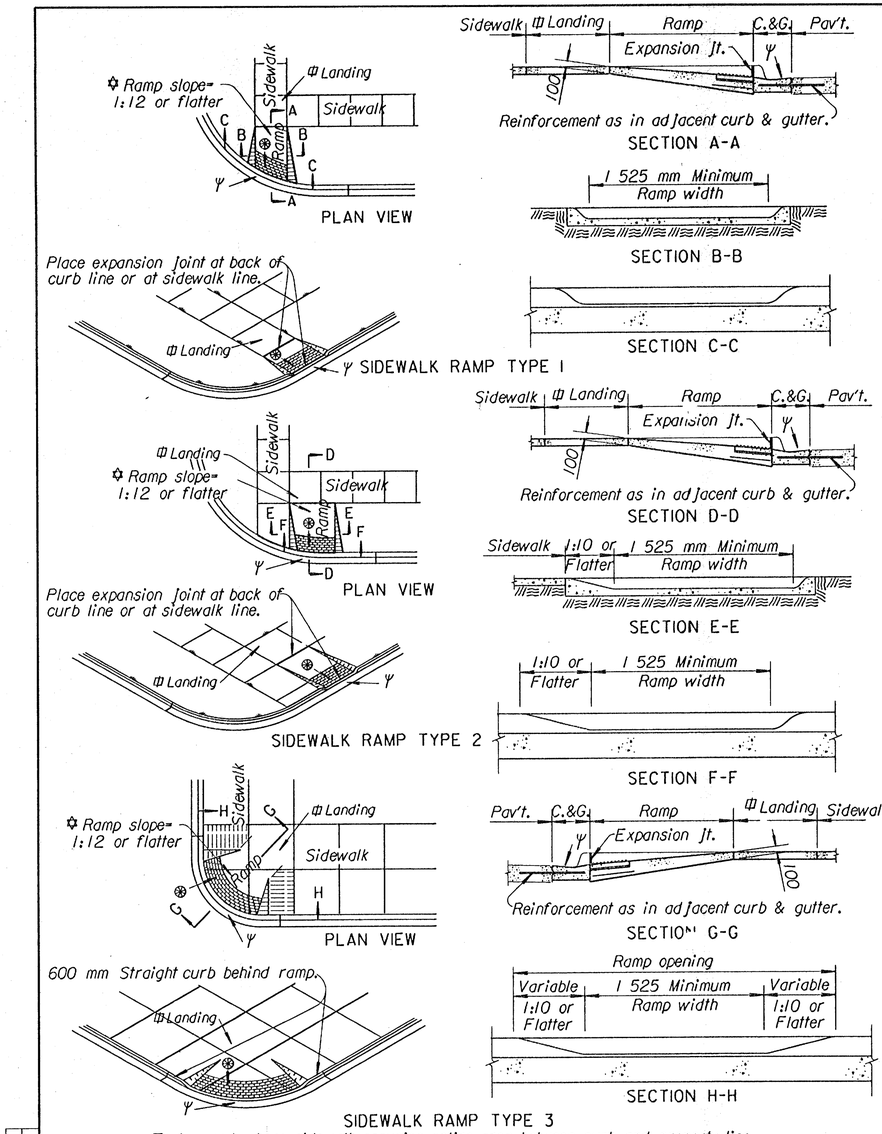

To be used where sidewalk occupies entire area between curb and property line.

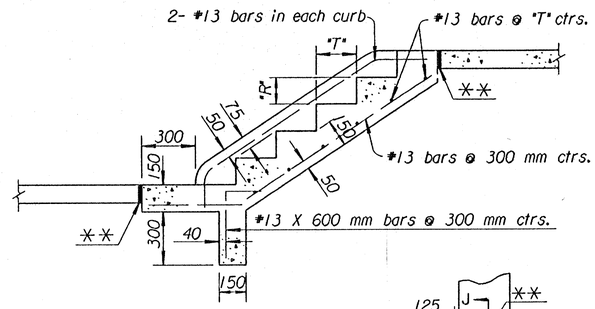

Step formula:
"R" x "T" = not less than 45,000 nor more than 48,400.
The maximum "R" = 170 mm
The minimum "T" = 280 mm

Note: Reinforcing bars shown are to be used only when more than four steps are necessary. Where field conditions permit, the steps should not be constructed too steep.

Φ Expansion Joint (19 mm redwood board) placed at either back of curb line or at sidewalk line.

✱✱ Expansion Joint (19 mm redwood board) located as shown.

◆ Variable width (1 525 mm min.). Entrance walk to be same width as approach walk. Sidewalk width of 1 220 mm may be used where existing conditions prohibit use of 1 525 mm

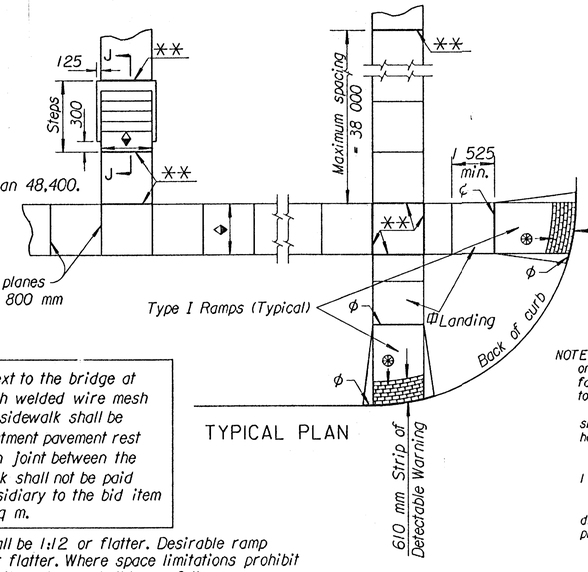

TYPICAL PLAN

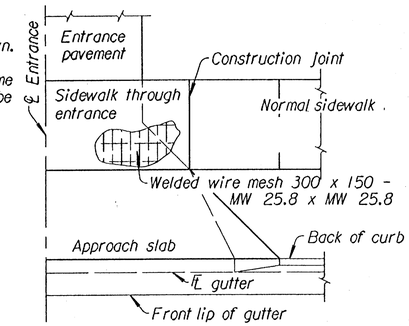

REINFORCEMENT DIAGRAM
SIDEWALK THROUGH ENTRANCE

See Standard Drawing RD683 SI for details of Alley and Entrance Pavement.

Note: The last 1 200 mm of sidewalk next to the bridge at all quadrants shall be 260 mm thick with welded wire mesh 300 x 150-MW 25.8 x MW 25.8. The sidewalk shall be thickened to 300 mm to rest on the abutment pavement rest with a 19 mm redwood board expansion joint between the bridge EWS and the sidewalk. This work shall not be paid for directly, but shall be considered Subsidiary to the bid item Sidewalk Construction (100 mm)(A.E.) sq m.

✡ Ramp slopes in new construction shall be 1:12 or flatter. Desirable ramp slopes on existing sites shall be 1:12 or flatter. Where space limitations prohibit construction of 1:12 slopes at existing sites slopes shall be as follows:
1:8 or flatter for a maximum rise of 75 mm.
1:10 or flatter for a maximum rise of 150 mm.

Φ Landing slopes shall be 1:48 or flatter. Landings shall be the same width as the ramp and min. 1.525 m in length.

Ψ The counter slope shall be 1:20 or flatter at the base of sidewalk ramps. Refer to standard drawing RD691 SI for additional curb and gutter details.

⊛ Detectable warning installation is typical and required on Sidewalk Ramps Type 1, Type 2, Type 3, median ramp crossings and other locations as shown in the plans. Refer to standard drawing RD691 SI for additional details.

GENERAL NOTE

NOTES: The details depicted here may not be appropriate for all locations. Designs shall meet this criteria on all new construction projects unless impracticable by site restrictions. For an existing sidewalk facility where the sidewalk will be replaced, this sidewalk will be replaced according to this drawing to the maximum extent feasible.

Ramps shall be provided at all corners of street intersections where there is existing or proposed sidewalk and curb. Ramps shall also be provided at walk locations in mid-block in the vicinities of hospitals, medical centers and athletic stadiums.

Details shown on this sheet apply to all construction or reconstruction of streets, curbs or sidewalks.

Use of sidewalk ramp Type 2 shall be restricted to locations where is is not feasible to use Types 1 or 3.

Curb cut ramps are to be located as shown on the plans or as directed by the Engineer.

If possible, drainage structures should not be placed in line with ramps. Except where existing drainage structures are being utilized in the new construction, location of the ramp should take precedence over location of drainage structure.

Sidewalks shall be ramped where the driveway curb is extended across the walk.

Care shall be taken to assure a uniform grade on the ramp, free of sags and short grade changes.

Expansion Joints shall be placed in sidewalks as follows: In long runs, expansion joints shall be 19 mm redwood boards flush with the surface, at a maximum spacing of 38 m. This same joint should be used at sidewalk junctions as shown in Typical Plan.

Where the end of the sidewalk abuts a curb, a 19 mm redwood board flush with the surface shall be used.

Where the sidewalk is parallel and adjacent to a rigid structure, a 13 mm premoulded joint filler (Nonextruding, Type B) shall be used.

Sidewalk shall slope toward the street at a 1:50 or flatter, and where necessary, may be depressed or sloped to fit alleys and entrances as shown on the plans or as directed by the Engineer.

Where clear width of sidewalk between top of ramp and building or other obstruction is less than 1 220 mm, the slope of the flared sides shall be 1:12 or flatter.

Where sidewalk is shown to be constructed back of an entrance it shall be 150 mm thick with welded wire mesh reinforcement of the same gauge and spacing of wires as in entrance pavement, as shown in the Reinforcement Diagram. Bid item will be "Sidewalk Construction (150 mm) either with or without air entrainment.

Where the plans do not require air entrainment for sidewalk and sidewalk ramps, at the Contractor's option, Grade 25 Concrete (AE) maybe used throughout. Payment will be made as square meters of Sidewalk Construction.

At the Contractor's option Grade 25 Concrete (AE) may be used throughout for construction of steps, but payment will be made as Grade 25 Concrete.

Surface texture of the ramp shall be that obtained by a wooden float or brushed finish to the slope of the ramp.

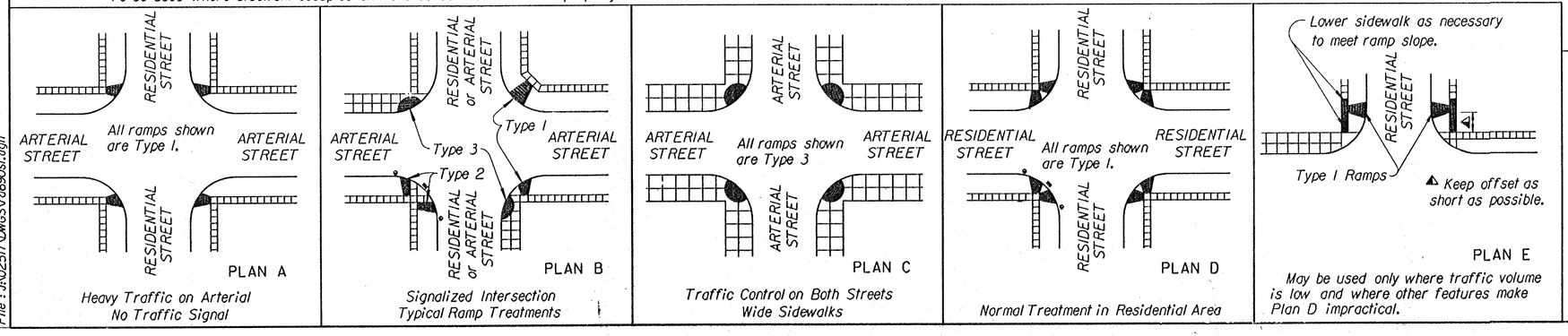

LEGEND

- Sidewalk Ramp Type 1
- Sidewalk Ramp Type 2
- Sidewalk Ramp Type 3
- Preferred location of drainage inlet (Typical)
- Alternate location of drainage inlet (Typical)
- Sidewalk

NO.	DATE	REVISIONS	BY	APP'D
4	8-20-03	Revised notes and details	S.W.K.	J.O.B.
3	6- 2-03	Added Detectable Warning details.	S.W.K.	J.O.B.
2	4-30-02	Rev. concrete from Class to Grade.	S.W.K.	J.O.B.

KANSAS DEPARTMENT OF TRANSPORTATION

SIDEWALK & STEPS

~~RD690 SI~~

FHWA APPROVAL	9-8-03	APP'D. James O. Brewer	
DESIGNED	DETAILED	QUANTITIES	TRACED Bowser
DESIGN CK.	DETAIL CK.	QUAN.CK.	TRACE CK. Seltz

Drawn By :untitled Plotted :7/14/2004
File : J:\0230\TQWeb\rd690si.dgn