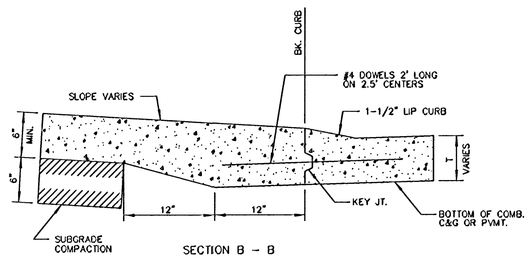

SECTION B – B

BACK OF CURB DETAIL

6"x12" W4xW4 WIRE FABRIC REINFORCING SHALL BE PLACED SUCH THAT THE WIRES WITH THE 6" SPACING WILL RUN PARALLEL WITH THE LONGITUDINAL JOINT.

SEE JOINT DETAILS THIS SHEET

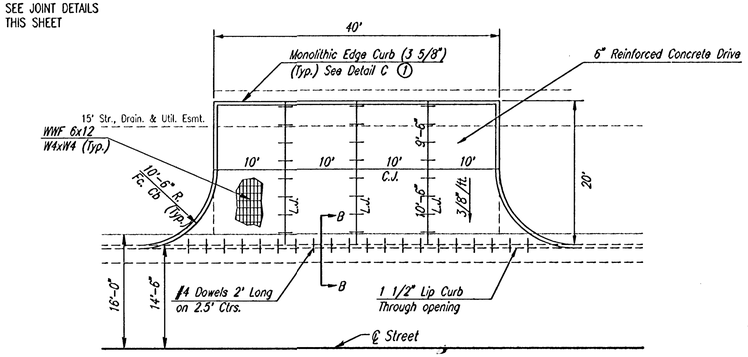

DRIVEWAY DETAILS

⑦ MONOLITHIC EDGE CURB SHALL BE SUBSIDIARY TO "6" REINFORCED CONCRETE DRIVE"

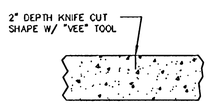

CONTRACTION JOINT (C.J.)
OR LONGITUDINAL JOINT (L.J.)

NO SAWN JOINTS WILL BE ALLOWED

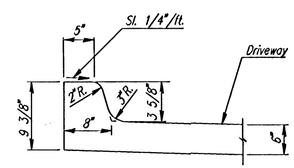

DETAIL C
(3 5/8" Monolithic Edge Curb)

RECORD DRAWING
20 NOV 03

No.	Revision	By	Date

CITY OF WICHITA, KANSAS
NEIL D. CABLE P.E. – CITY ENGINEER

MISCELLANEOUS PAVING DETAILS

CITY OF WICHITA PROJECT NO. 472-83678

Professional Engineering Consultants, P.A.
303 S. TOPEKA • WICHITA, KANSAS 67202
316-262-2691 • FAX 316-262-3003

Designed by	BER, JJD	Job No.	35-02662	Sht. 7 of 17
Drawn by	TLS	Date	January 2003	

DSN: BER OPER: TLS SCALE: 1=10.00
Q:\2002\02662\000\MISC\TL1 03-04-2003 11:28:28 am