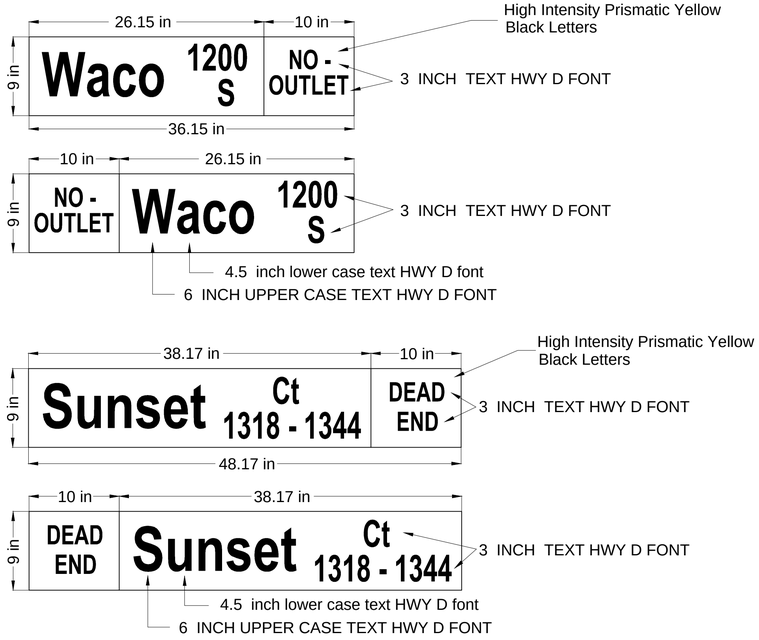

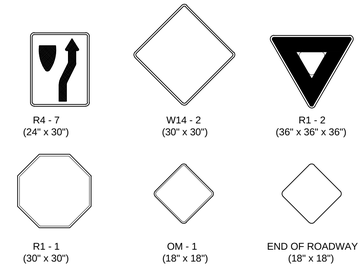

* IN NO CASE SHALL THE SPECIFICATIONS BE LESS THAN REQUIRED BY THE CURRENT MUTCD.

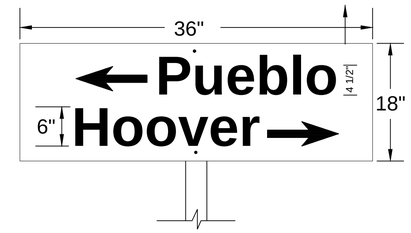

FLAT PLATE STREET NAME SIGN

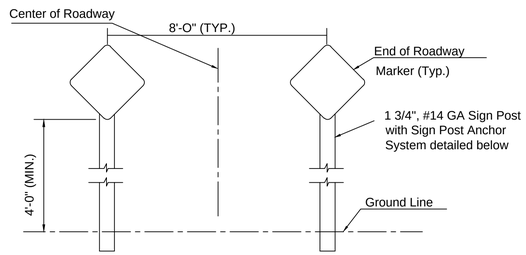

TYPICAL END OF ROADWAY SIGN MOUNTING INSTALLATION

PERFORATED TUBE SIGN POST INSTALLATION

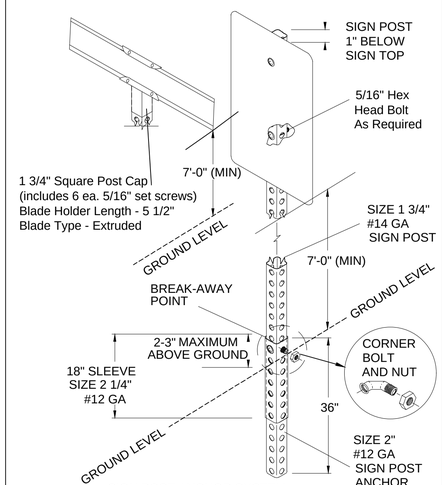

SIGN POST ANCHOR SYSTEM

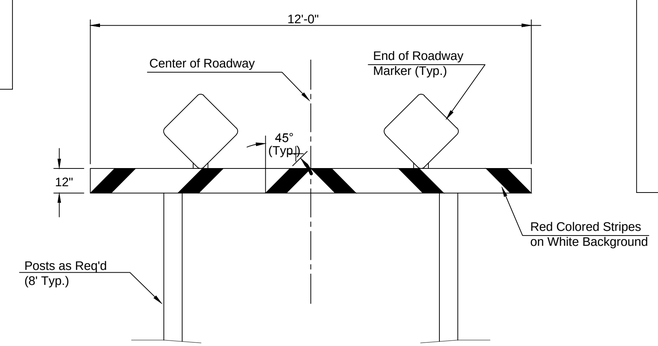

TYPE I BARRICADE DETAIL W/ E.O.R. MARKERS

SIGN ASSEMBLY TABLE

STATION	OFFSET	SIGN	QUANTITY*
7+78	24' Rt	SNS	1
10+03	23' Rt	SNS	1
10+67	25' Rt	SNS	1
0+42	4' Rt & 4' Lt	EOR	2**