FHWA REG NO.	STATE	PROJECT NO.	YEAR	SHEET NO.	SHEETS
7	KANSAS			25	43

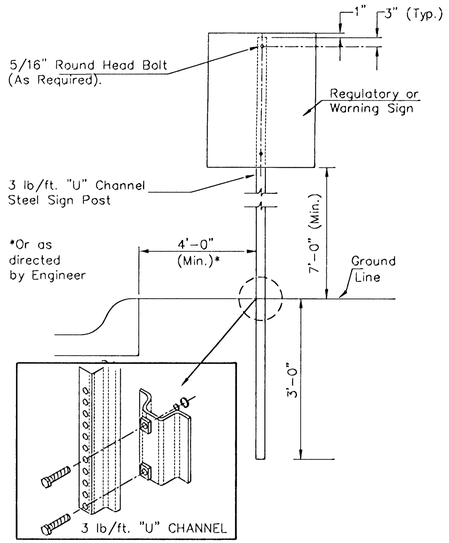

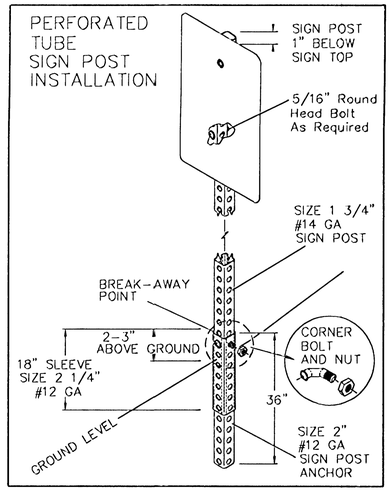

TYPICAL TRAFFIC CONTROL SIGN MOUNTING INSTALLATION

CURB AND GUTTER SECTION

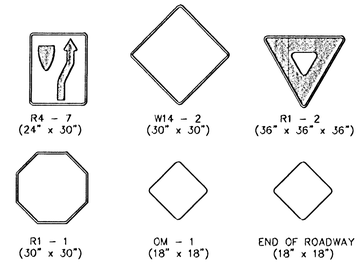

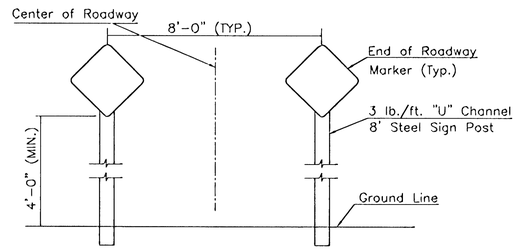

TYPICAL END OF ROADWAY SIGN MOUNTING INSTALLATION

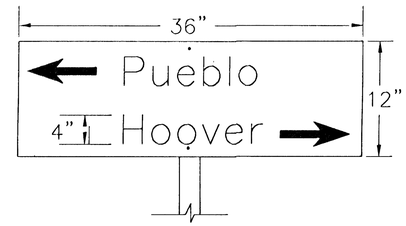

FLAT PLATE STREET NAME SIGN

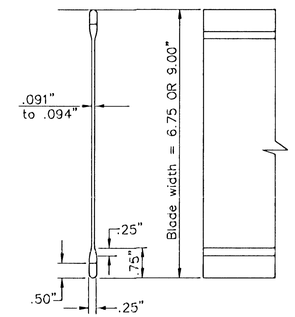

STREET NAME SIGN

BLADE DETAILS

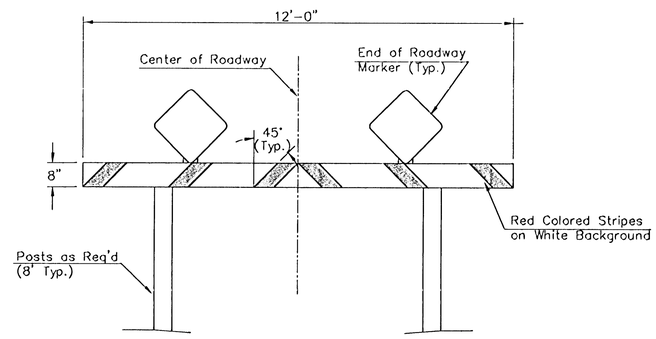

TYPE I BARRICADE DETAIL W/ E.O.R. MARKERS

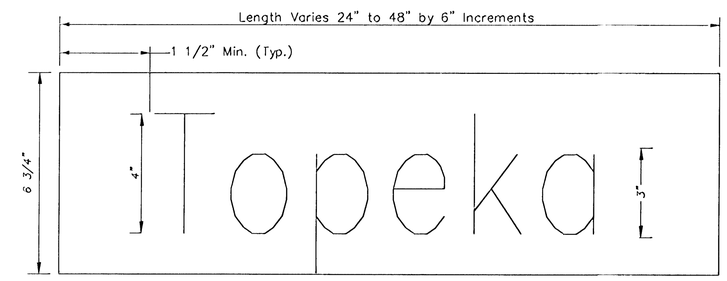

DETAIL A
6 3/4" STANDARD

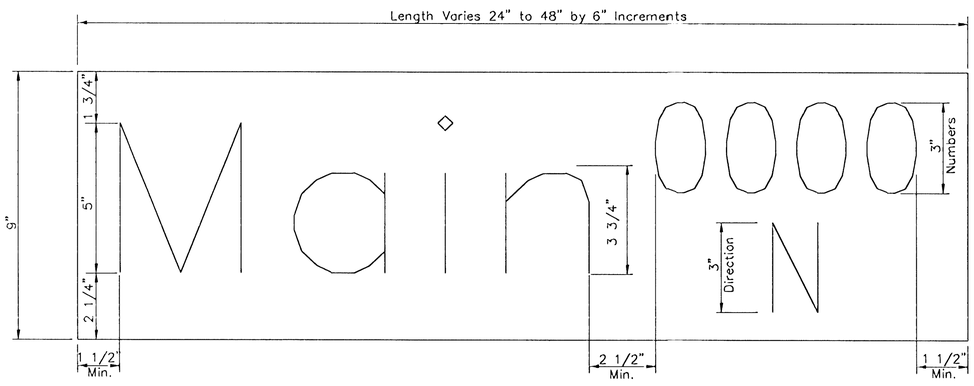

DETAIL B
9" METRO

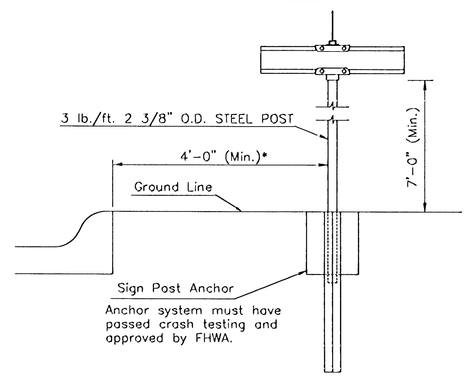

TYPICAL STREET NAME SIGN MOUNTING INSTALLATION

CURB AND GUTTER SECTION

SIGN ASSEMBLY TABLE

STATION	OFFSET	SIGN	QUANTITY*
17+70	22.00' Rt.	Street name	1
19+11	24.00' Rt.	Street name	1
19+49	24.00' Rt.	Street name	1
21+58	24.00' Rt.	Street name	1