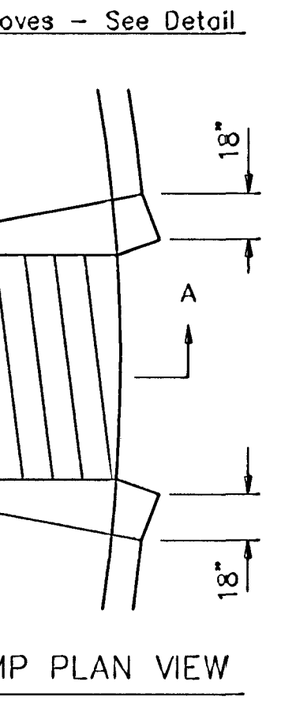

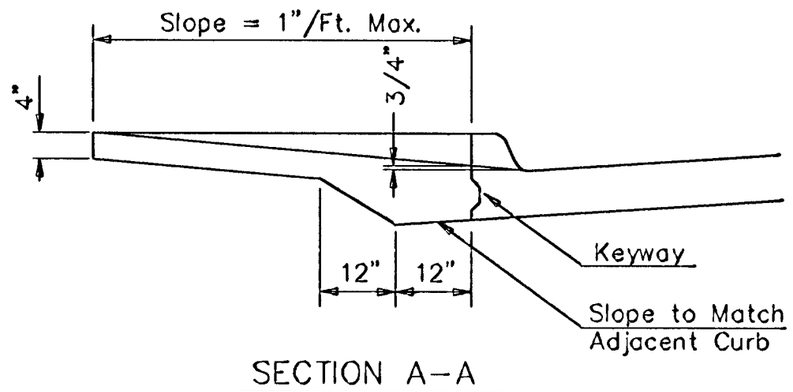

SECTION A–A

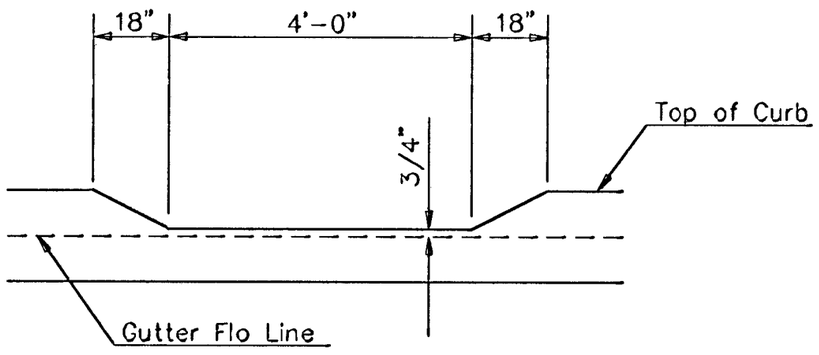

DEPRESSED CURB DETAIL

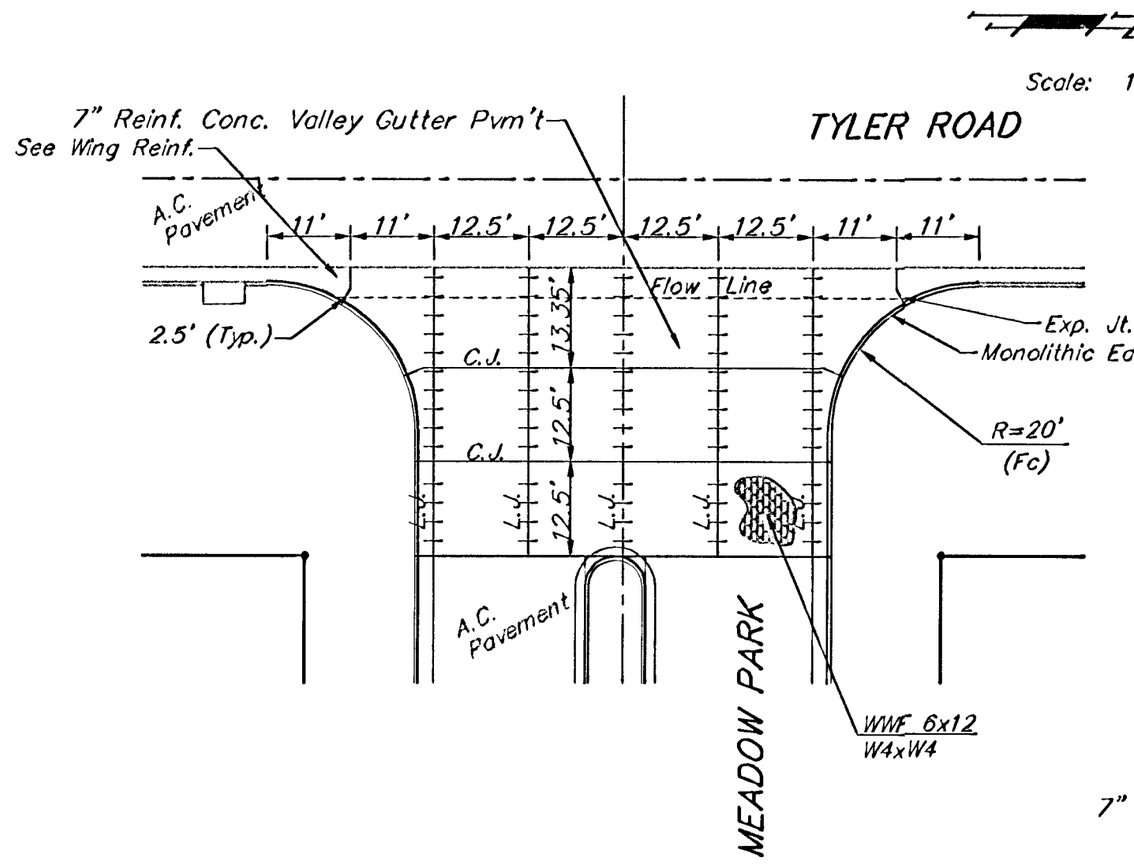

WHEELCHAIR RAMP DETAIL

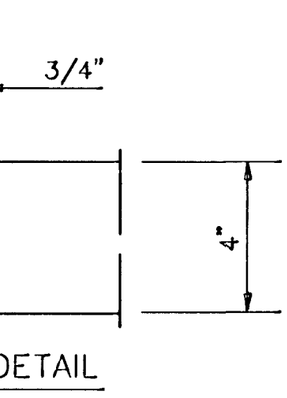

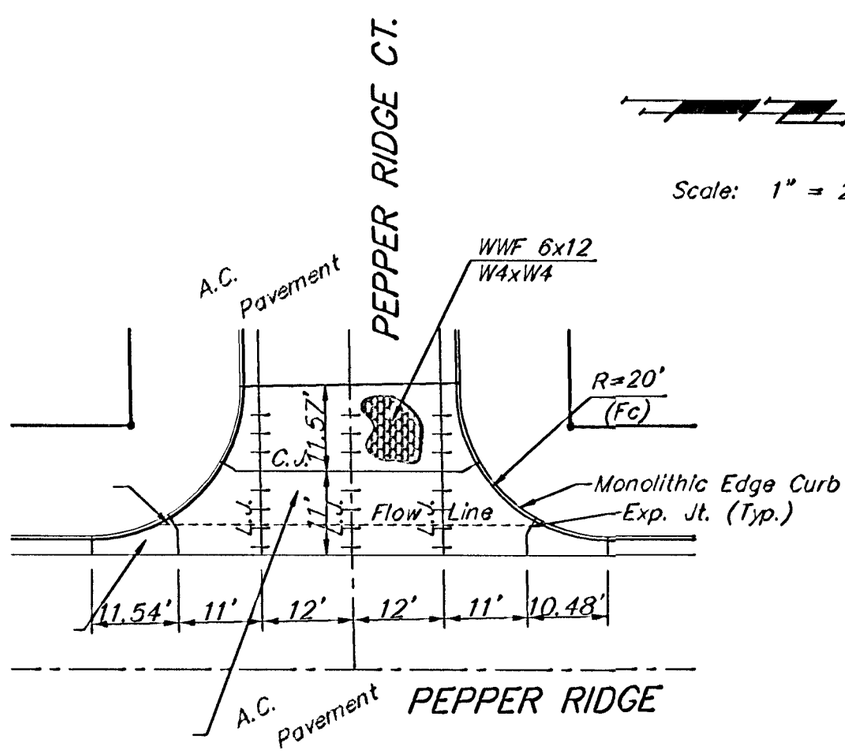

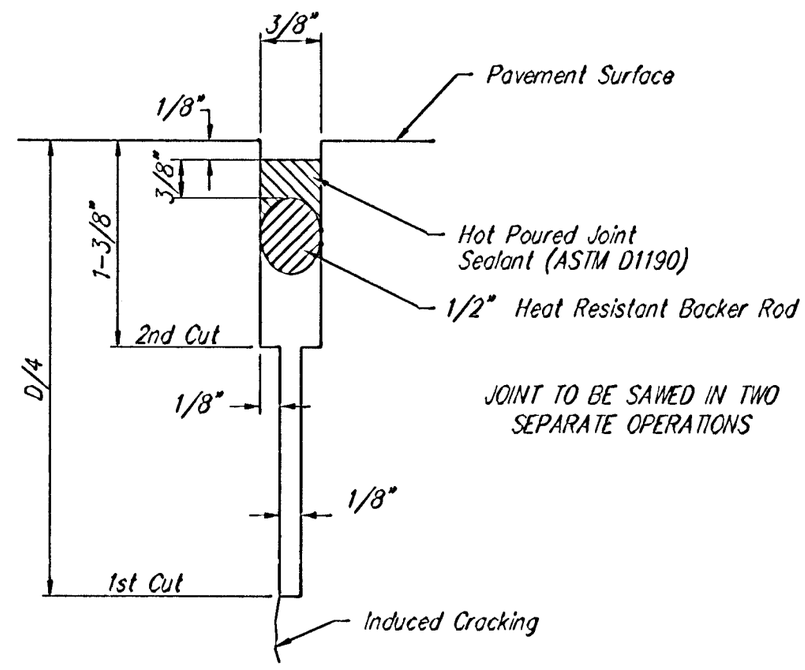

SAW JOINT DETAIL "A"

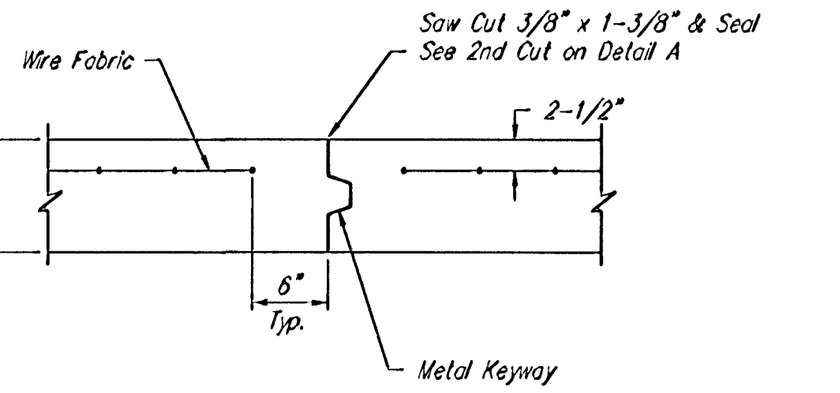

PTIONAL CONTRACTION JOINT
(CONSTRUCTION JOINT)

NG REINFORCING DETAIL

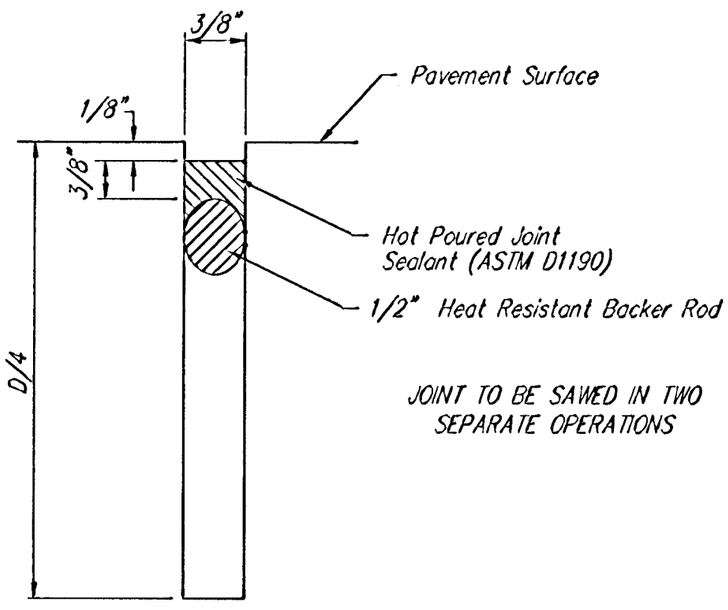
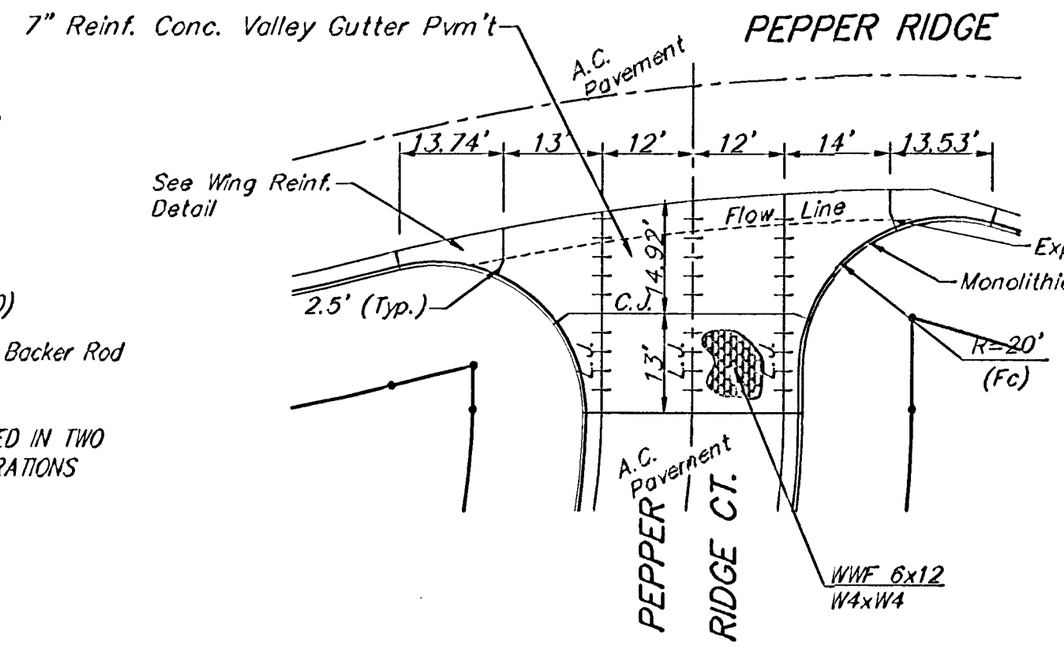
SAW JOINT DETAIL "B"