PROJECT NO.	SHEET NO.	TOTAL SHEETS
472-82873	14	14

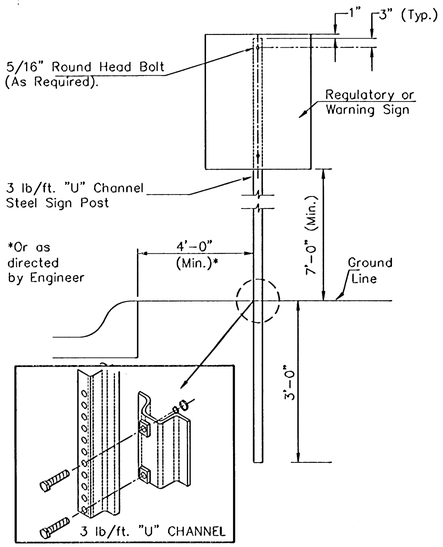

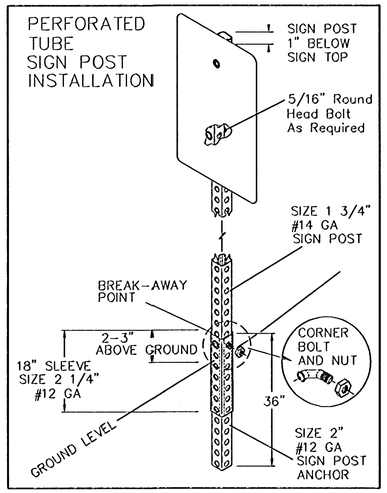

TYPICAL TRAFFIC CONTROL SIGN MOUNTING INSTALLATION

CURB AND GUTTER SECTION

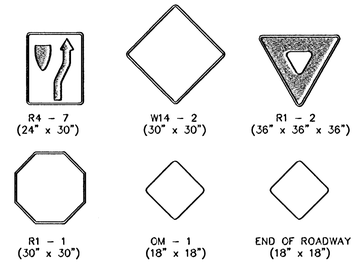

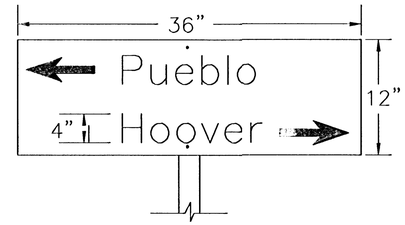

FLAT PLATE STREET NAME SIGN

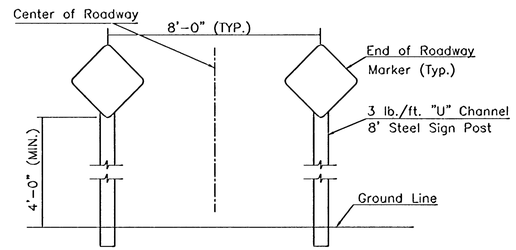

TYPICAL END OF ROADWAY SIGN MOUNTING INSTALLATION

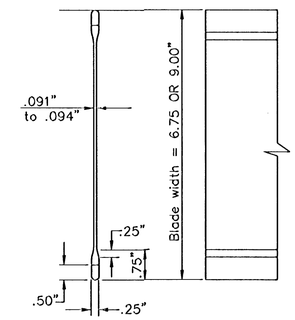

STREET NAME SIGN

BLADE DETAILS

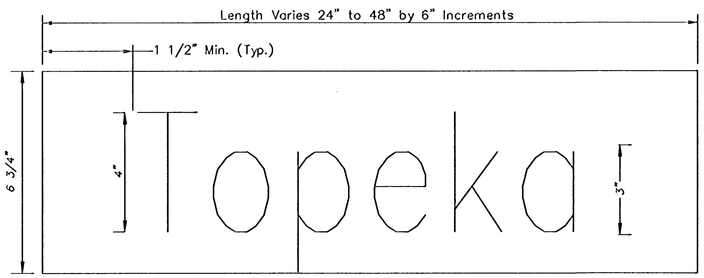

DETAIL A
6 3/4" STANDARD

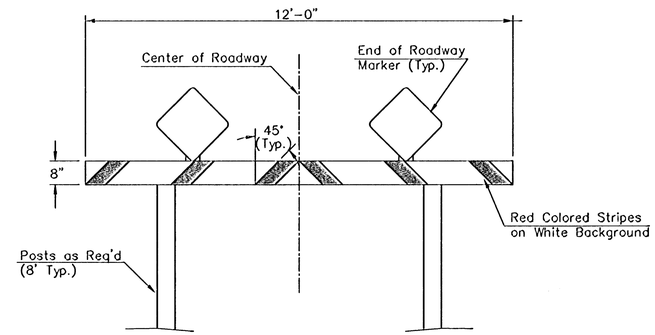

TYPE I BARRICADE DETAIL W/ E.O.R. MARKERS

SIGN ASSEMBLY TABLE

STATION	OFFSET	SIGN	QUANTITY*
59+20	19.0' RT.	STREET NAME	1
62+10	19.0' RT.	STREET NAME	1