| FHWA REGION NO. | STATE | PROJECT NO. | YEAR | SHEET NO. | TOTAL SHEETS |
|---|---|---|---|---|---|
| 7 | KANSAS | 87 N-0203-01 | 2003 | 13 | 48 |

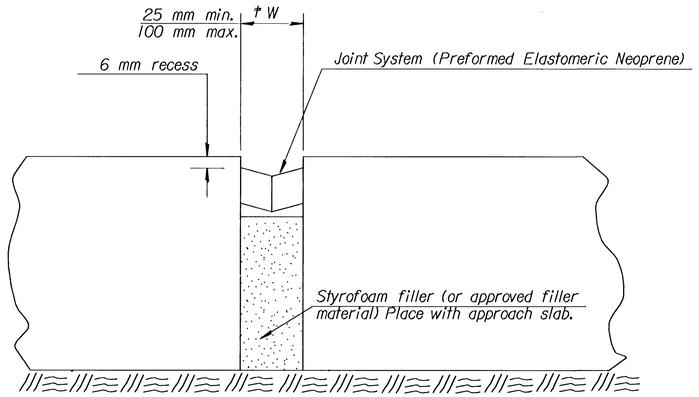


TYPE C

† W = INSTALLATION GAP

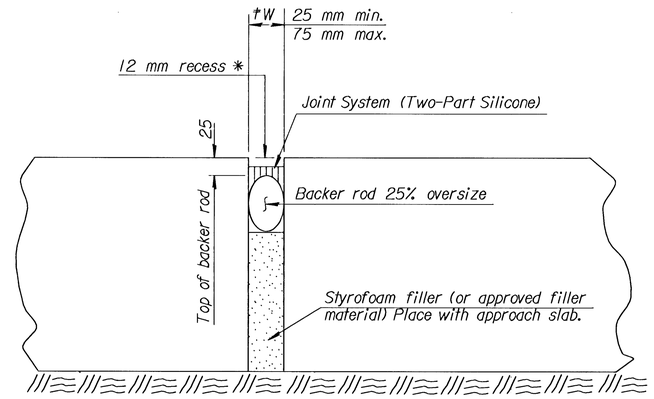


TYPE B

* Note: Joint shall be recessed 12 mm in areas subject to traffic. Joint shall be flush in shoulder areas. Maintain 12 mm depth of silicone joint sealant. Vary depth of backer rod.

EXPANSION JOINT DETAIL

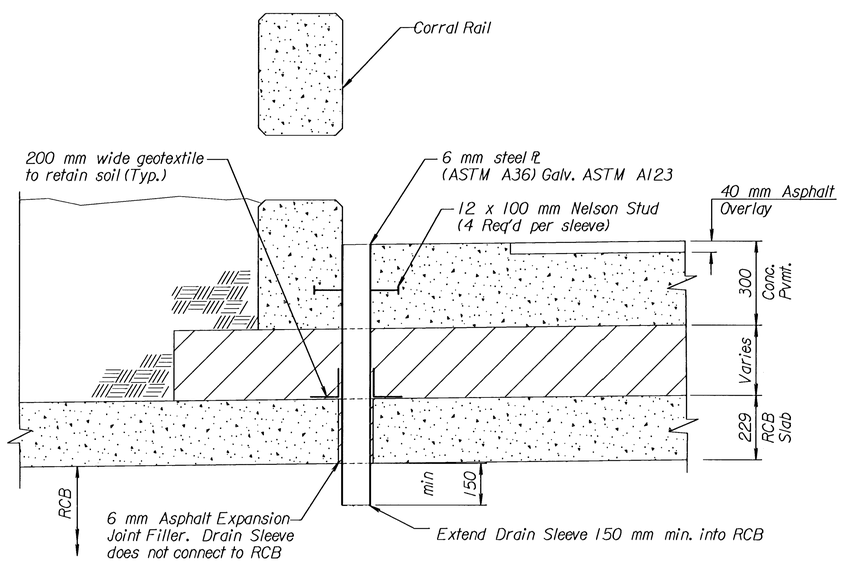


SECTION

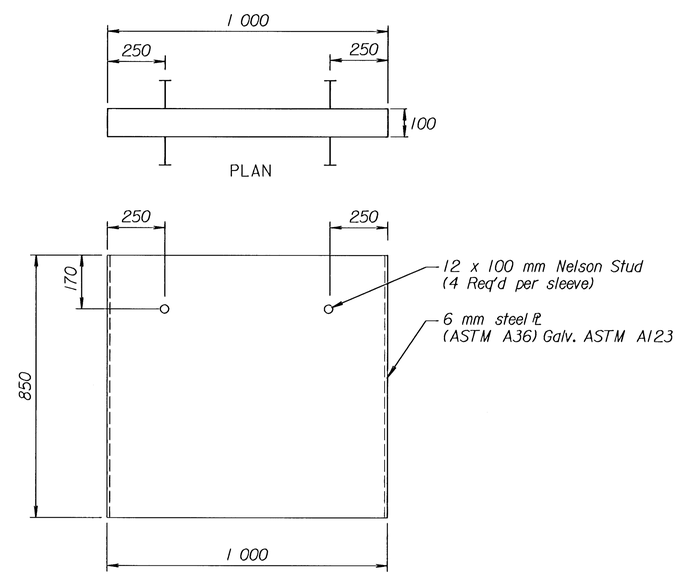


ELEVATION

TYPICAL DRAIN SLEEVE DETAIL

See Concrete Pavement Detail Sheet and RCB Detail Sheet for location of Drain sleeve. Drain Sleeve is Subsidiary to Class AAA Concrete (AE). 6 required for project.

## GENERAL NOTES

See Concrete Pavement Detail Sheet for location and type of expansion joints.

The joint opening shall be formed just prior to placement of the concrete pavement. The material used to form the joint opening shall be removed after the concrete pavement has been in place for a minimum of six days.

Cleaning and construction of the joint shall not begin until the concrete pavement has cured a minimum of 7 days.

The joint shall be thoroughly cleaned by sandblasting and by high pressure air blast to remove all laitance and contaminants from the joint. When any part of the joint is shaped by saw cutting in lieu of forming, a water blast shall preceed sandblasting and air cleaning.

Sandblasting shall be accomplished in two passes to clean each face of the joint (one pass for each face). The nozzle shall be held at an angle to the joint face and within 25 mm to 50 mm of the face.

Any contaminants such as oil, curing compound, etc. shall be removed by sandblasting to the satisfaction of the Engineer. Solvents, wire brushing, or grinding shall not be permitted.

The joint shall be air blasted just prior to installation of the backer rod. The air compressor used for joint cleaning shall be equipped with trap devices capable of providing moisture-free and oil-free air. Recommended pressure is 620 kPa. Immediately prior to installation of the backer rod, the joint shall be spot checked by rubbing a finger on the face of the joint to determine that residual dust or dirt has been removed. It is required that the Engineer inspect the joint immediately prior to installation of the joint material.

Traffic shall not be allowed on the joint for a minimum of 3 hours unless otherwise directed by the Engineer.

All work and materials necessary for the preparation, construction, and installation of the joint will be subsidiary to the Concrete Pavement (260 mm)(Reinf.)(AE).

TYPE B

The joint shall be sealed with "Joint System (Two-Part Silicone)" in accordance with the K.D.O.T. Specifications.

The sealant shall be installed immediately after the backer rod is placed. The faces of the joint shall be completely free of any dampness or free water. Placement of the rod and sealant shall not begin when there is any expectation of rain or moisture occurring before the joint can be completed.

The sealant shall be installed to the depth shown in the details but shall not be greater than 12 mm deep at any location. The sealant shall be a silicone material Type II (Self Leveling).

Sealant shall not be installed when air temperature is less than 4° C or when air temperature is expected to be less than 4° C within 3 hours after installation is complete.

TYPE C

A joint will be provided as shown in the details. The seal will be recessed 6 mm below slab grade. The seal will be a "Joint System (Preformed Elastomeric Neoprene)". The seal shall be installed as per product specifications to provide a watertight joint throughout the roadway. See K.D.O.T. Specifications.

If the finished joint will be spliced, an epoxy adhesive shall be used to provide a watertight seal at the splice.

| NO. | DATE | REVISIONS | BY | APP'D |
|---|---|---|---|---|

KANSAS DEPARTMENT OF TRANSPORTATION

CENTRAL BRIDGE AT TARA

MISCELLANEOUS PAVING DETAILS

| | | | |
|---|---|---|---|
| FHWA APPROVAL | | APP'D. | |
| DESIGNED | DETAILED | QUANTITIES | TRACED |
| DESIGN CK. | DETAIL CK. | QUAN.CK. | TRACE CK. |

Drawn By : $$USERNAME$$ Plotted : $$$$SYTIME$$$$
File : $$$$$$$$$$$$$$$$DCNSPEC$$$$$$$$$$$$$$