STATE	PROJECT NO.	YEAR	SHEET NO	TOTAL SHEETS
KANSAS	87 N-0203-01	2003	35	48

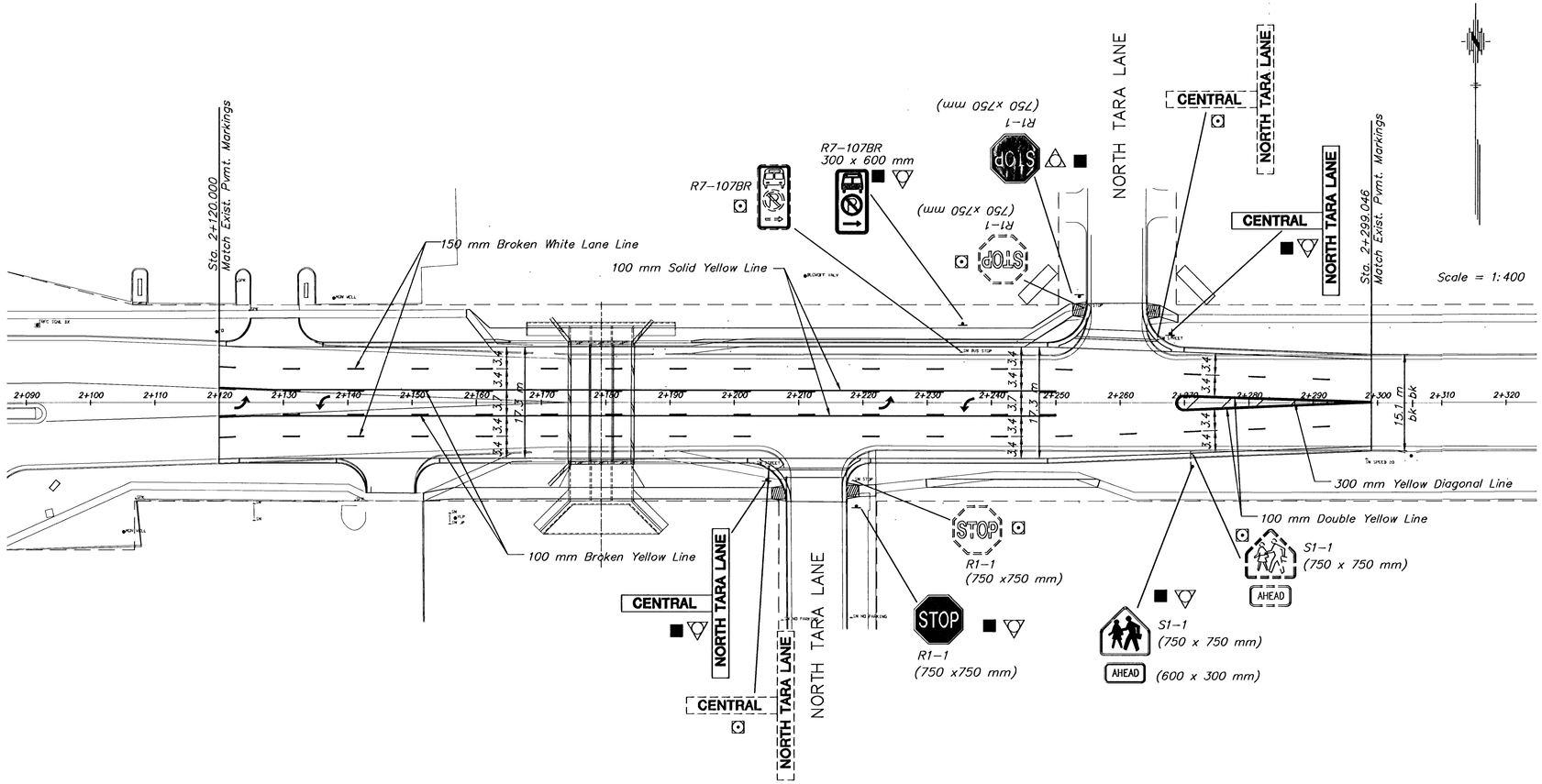

NOTES:

The Contractor shall exercise caution at all times when excavating for sign supports in and around areas where underground utilities exist and will be held responsible for any damage incurred to the system. Care must be taken when working around shrubbery while removing or excavating for sign supports. Caution shall be exercised when working around any existing signs that are to remain or are to be re-installed and the Contractor will be held responsible for damage to the signs, posts, or footings.

If existing signs that are to remain interfere with construction work, the Contractor shall remove, store, and reset the signs as directed by the Engineer. This shall be subsidiary to other items in the contract.

SYMBOL KEY

- Remove Sign, Post & Footing
- Mount on Existing Post
- Existing Sign

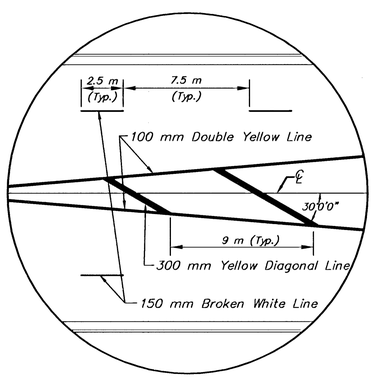

DETAIL "A"

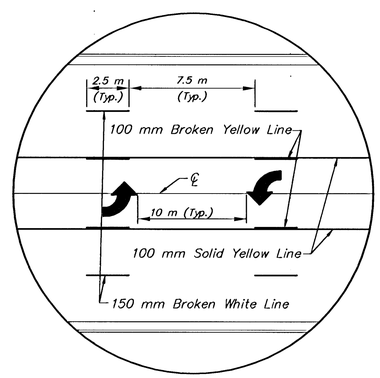

DETAIL "B"

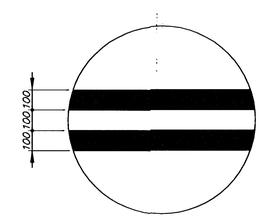

TYPICAL SPACING FOR DOUBLE YELLOW LINES

NO.	DATE	REVISIONS	BY	APP'D
2				
1				

KANSAS DEPARTMENT OF TRANSPORTATION

CENTRAL BRIDGE AT TARA
PAVEMENT MARKING AND SIGNING

PROJ. NO. 87 N-0203-01 SEDGWICK CO.

MKEC ENGINEERING CONSULTANTS, INC.
WICHITA, KANSAS

DESIGNED BY:	KJS	CHECKED BY:	KJS
DRAWN BY:	RSB	DATE: JAN. 2003	SHEET 35 OF 48

G:\CIVIL\01079\PAVE\01079PM.DWG 01/07/03 044447 PM CST