STATE	PROJECT NO.	YEAR	SHEET NO.	TOTAL SHEETS
KANSAS	87 N-0203-01	2003	38.005	48

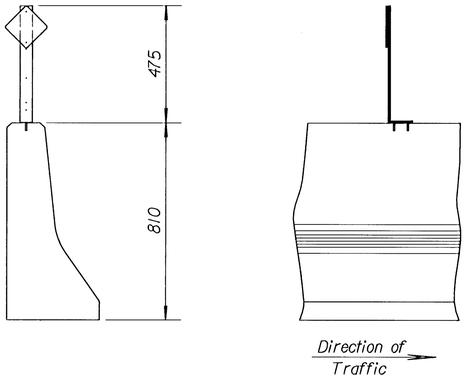

TYPICAL MOUNTING DETAIL

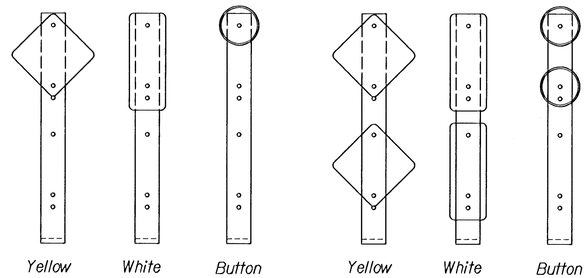

TYPE "A" TYPE "B"

DELINEATOR POSITION DETAILS

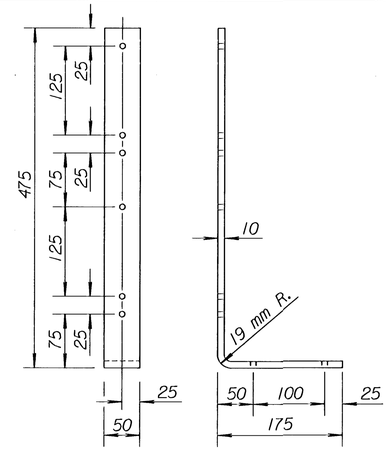

DELINEATOR BRACKET DETAILS

DESIGN DETAILS FOR DELINEATION ON 810 mm CONCRETE SAFETY BARRIER SECTION

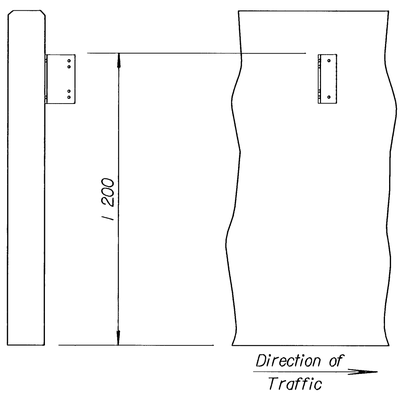

TYPICAL MOUNTING DETAIL FOR RETAINING WALL SECTION

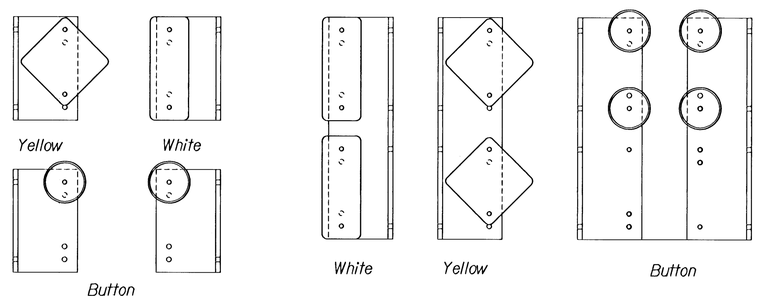

TYPE "A" TYPE "B"

DELINEATOR POSITION DETAILS

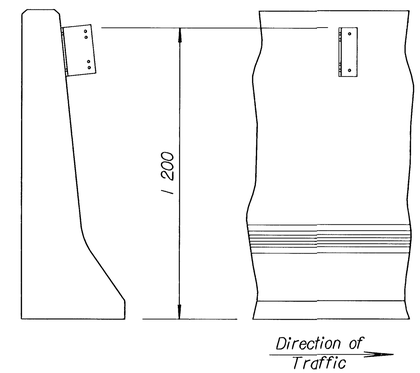

TYPICAL MOUNTING DETAIL

DESIGN DETAILS FOR DELINEATION ON RETAINING WALL & 1 300 mm CONCRETE SAFETY BARRIER SECTION

GENERAL NOTES

The delineators shall be spaced on 60 m centers, except through curves of radius less than 580 m and along ramps and ramp tapers where the spacing shall be on 30 m centers. Delineators should be installed back to back when used on 810 mm median barrier for two-way roadways.

The flat sheet sign blank shall be made of the aluminum alloy and thickness shown.

The 76 mm x 200 mm delineator sign face shall be covered with high performance white retroreflective sheeting. The 125 mm x 125 mm delineator sign face shall be covered with high performance yellow retroreflecting sheeting.

The type of adhesive for reflective sheeting shall be heat activated or pressure sensitive.

The 83 mm diameter white or yellow button delineator shall comply with the KDOT Standard Specifications.

The delineator bracket shall be fabricated from aluminum in the thickness and sizes shown. The material for the brackets shall comply with the Standard Specifications. All holes for mounting the delineator to the bracket shall be 10 mm diameter. The holes for mounting the bracket to the barrier shall be 11 mm diameter. All burrs and sharp edges shall be smoothed off. The brackets shall not be fabricated by the use of welding.

All items of the fastening accessories shall be Zinc or Cadmium plated.

The machine screws, nuts, and washers used to fasten the delineator to the bracket shall comply with the Standard Specifications.

Only one type of delineator shall be used on any project. The type of delineator (flat sheet or button) used on the project shall be as directed by the Engineer.

All work and materials required for the installation of the delineators shall be Subsidiary to the bid item "Traffic Control".

When delineators are installed on median or roadside barriers approaching a bridge, they shall be installed on the bridge rail in accordance with the spacing and details on this sheet.

The color of delineation (white or yellow) shall match the color of the pavement marking edge line.

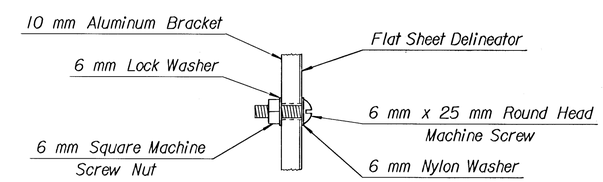

FLAT SHEET DELINEATOR MOUNTING

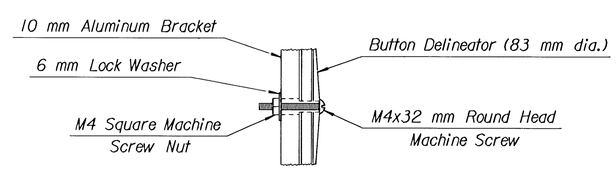

BUTTON DELINEATOR MOUNTING

DETAILS FOR ATTACHING DELINEATORS TO BRACKETS

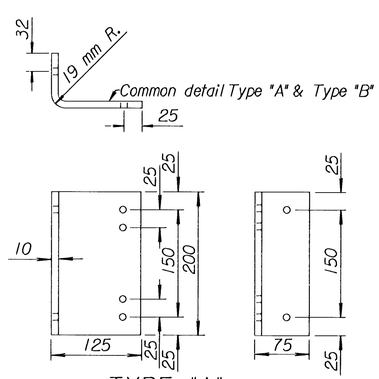

TYPE "A"

DELINEATOR BRACKET DETAILS

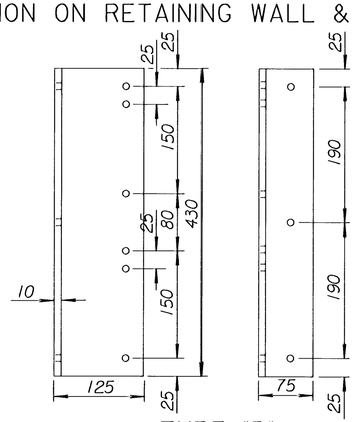

TYPE "B"

DELINEATOR BRACKET DETAILS

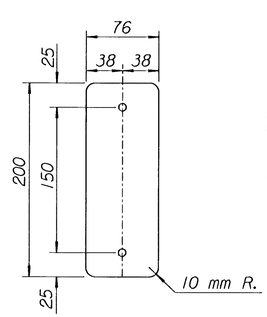

NOTE: The aluminum sign blanks are to be ASTM B-209(H), Alloy 6061-T6, or 5154-H38, or 5052-H38.
The aluminum sign blank shall be 1 mm thick.
Both faces and all cut edges of sign to be degreased and etched.
All holes shall be 8 mm diameter.

FLAT SHEET SIGN BLANK DETAILS

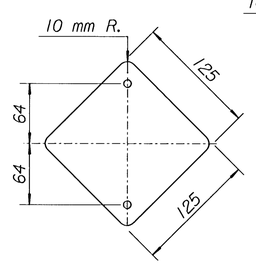

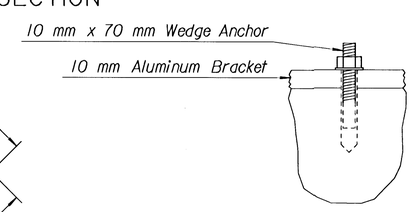

DETAILS FOR ATTACHING BRACKETS TO SAFETY BARRIER

Road Type	Right Edge Delineator	Left Edge Delineator
Main Line	Type "A" White	Type "A" Yellow
Acceleration Lane Deceleration Lane	Type "B" White	Type "B" Yellow
Ramp	Type "A" White	Type "A" Yellow

PATTERN OF DELINEATION

NO.	DATE	REVISIONS	BY	APP'D
3				
2				
1	2-26-03	Revised layout and details.	S.W.K.	J.O.B.

KANSAS DEPARTMENT OF TRANSPORTATION

DESIGN DETAILS FOR DELINEATION ON CONCRETE SAFETY BARRIER

~~RD649 SI~~

FHWA APPROVAL	6- 4-03	APPROVED	James O. Brewer
DESIGNED	DETAILED	QUANTITIES	TRACED Bowser
DESIGN CK.	DETAIL CK.	QUAN.CK.	TRACE CK. KING

38.005

Drawn By : $$USERNAME$$ Plotted : $$$$SYTIME$$$$$$
File : $$$$$$$