GENERAL NOTES

The Contractor shall give all property owners and/or tenants of developed property abutting the project limits a minimum of ten (10) days advance notice prior to start of construction.

The Contractor shall be responsible for preserving existing property irons shown on the plans. The Contractor will be required to reestablish any shown property irons which are damaged or destroyed by his construction operations. Such irons shall be reestablished by a licensed land surveyor in accordance with state laws.

All construction staking shall be performed by the City of Wichita Public Works Department at no cost to the contractor. The contractor shall coordinate the survey staking with the City of Wichita Public Works Department and give the surveyor 48 hours notice when stakes are required.

A licensed land surveyor shall take field ties to all quarter section corners. The contractor shall set a city survey monument box in the required location where such quarter section corners fall within the limits of pavement construction. Survey Monument Boxes will be furnished at no cost by the City. The surveyor will accurately locate and install the iron at the quarter section corner.

Utility service lines, poles, valve boxes, meters, etc... are to be adjusted as necessary by others prior to construction unless the plans specifically call for their adjustment by the contractor. The contractor will be required to work around existing utilities within the right-of-way which do not conflict with proposed construction.

Existing utilities and their locations, as shown on the plans represent the best information obtainable for design. Location information has been obtained from the various utility companies and is either from company record drawings or company provided field locations. The plan locations shown are not guaranteed. Additional existing utilities may also be encountered.

The contractor shall adjust water valve boxes as directed by the engineer at the price bid for said adjustments. The water department shall field locate water valves one time during construction when requested by the contractor. It shall be the contractor's responsibility to preserve such field locations during the construction process. Water valves or water valve boxes damaged during construction shall be repaired by the contractor at his own expense.

All stationing, radii, pavement widths, offset distances, etc... are measured to the High Edge of the curb and along the project baseline unless otherwise noted on the plans.

Properties within the project may have underground irrigation systems (drippers, sprinklers, and valves) which conflict with new construction. Contractor shall remove such components as needed during construction of the project. The irrigation system shall be reinstalled in like kind before project completion. Any irrigation system modifications required because of project improvements shall be coordinated with the property owner. Portions of underground irrigation systems not in conflict with new construction shall be protected from damage and shall remain in place. All work related to underground irrigation systems shall be Subsidiary to Site Restoration.

All adjacent buildings, structures, parking lots, drives, street pavements, utility lines, utility structures and appurtenances other than shown for replacement shall be protected from damage during construction of the project. Damaged items shall be removed and replaced by the contractor at no additional cost to the owner. Sheeting and shoring may be required to protect the items mentioned above. Cost shall be Subsidiary to Site Restoration.

Connection of existing storm sewers or drainage structures to proposed conduits and/or structures shall include all material, equipment and labor. These connections shall not be paid for directly, but shall be considered subsidiary to the various proposed conduits or structures. This work shall be as directed by the engineer and shall be Subsidiary to the specific structure bid items.

A full depth saw cut of the existing surface courses or one-fourth the depth of the existing total pavement thickness shall be provided at locations where proposed construction abuts an existing surface course or pavement for which partial removal of that surface or pavement is required. Sawed joint to facilitate removal within three (3) feet of existing joints will not be permitted and for such instances the limits of removal shall extend to the existing joint. Such saw cuts will not be paid for directly, and this cost shall be considered as Subsidiary to the removal of the surface or pavement.

All pipes and other material removed shall become the property of the City of Wichita. Contractor shall stockpile on right-of-way. The City of Wichita will recover salvageable pipe and contractor shall remove remaining material.

Rubble from the removal of miscellaneous structures and excess excavation which is to be wasted shall be disposed of on sites to be provided by the contractor. These sites shall be approved by the Engineer as to suitability, appearance and site location. Locations that, in the opinion of the Engineer, will leave an unsightly appearance will not be approved. All disposal sites must be approved the Kansas Department of Health and Environment. Material either stockpiled or disposed of in a flood plain would require a Kansas State Board of Agriculture permit. Any material dumped in waters of the United States or wetlands is subject to U.S. Corps of Engineers permitting regulations. Any material buried or stockpiled beyond approved construction limits would require additional archeological investigations unless buried in a previously approved borrow location.

Trees in public right-of-way which are in direct conflict with proposed new construction shall be removed by the Contractor as approved by the Engineer. Trees 6" or smaller in diameter within 6' behind the curb, shall be relocated at the direction of the Park Department. Cost Subsidiary to Clearing Right-Of-Way.

Contractor Shall remove and deliver to City Storage at 1801 S. McLean Blvd. all existing traffic and regulatory signs, street name, speed limit, etc... Existing stop signs shall remain or be relocated as directed by the Engineer to allow for new construction. Cost shall be Subsidiary to other bid items.

Contractor will be required to provide a minimum advance notice of forty eight (48) hours to utility companies prior to starting any excavation as follows:

Kansas One Call	(State)	1-800-344-7233
	(Wichita)	687-2470

The Contractor must notify the following in case of emergency:

CATV-Cox Communications	(316)262-4270
E-KGE	(316)383-8600
T-Southwestern Bell Telephone Co.	(800)246-8464
G-KGS	(316)383-8600
G-Peoples Natural Gas	(316)941-1608
	or (800)303-0752
SS & W-City of Wichita Water & Sewer Dept.	(316)268-4940
SWS-City of Wichita Stormwater Utility	(316)268-4071
AT&T-AT&T Fiber Optic	(316)648-0943
	or (800)252-1133

Driveway widths and locations shown are tentative. Contractor will be required to obtain a properly executed driveway request form signed by property owner or his authorized representative verifying such driveway widths and locations. Such forms shall be submitted to the Engineer for his review and approval.

All structures and/or foundations located within the construction limits shall be removed to a minimum depth of 18" below the subgrade in areas to be paved or to a minimum of 18" below the ground line in areas to be seeded.

Contractor shall adjust sidewalk alignment if necessary to clear existing utilities and improvements and landscaping (gas meters, telephone pedestals, trees, etc.) located at right-of-way line, and as approved by the Engineer. Payment for alignment adjustment shall be Subsidiary to the bid item for Sidewalk.

All Water mains and appurtenances shall be installed in accordance with City of Wichita, Kansas Standard Specifications for water main installations No. 14533.

Opening and closing water valves shall be done slowly to prevent damage to the water distribution system form water hammer. All valves closed by the contractor must be reopened as new construction permits. Project inspector must ascertain that any valve closed by the contractor is reopened. Contractor will be permitted to operate water valves only when the project inspector assigned to the project is present.

Contractor shall not start work on the project until the project inspector is assigned to the project and is present on the site. Any work done without inspection will be required to be uncovered for inspection.

Fire hydrants designated to be removed shall be returned to the Wichita Water Department storage yard at 1701 Sim Park Drive.

Existing Valve boxes designated to be removed and returned to the Wichita Water Department storage yard at 1701 Sim Park Drive. The holes shall be filled and the existing valves abandoned in place.

The Contractor shall be required to notify each customer before water service to that customer is turned off and to make reasonable effort to restrict shut downs to times that are acceptable to the customer.

Water service connections as shown on the drawings represents the best information available for design. All service connections to include connections, tubing, meter setter, meter box, ring and cover; Reinstallation of existing meter. Payment Subsidiary to Service Replacement.

All water line pipe material used for this project shall be C-900 unless noted otherwise.

The Contractor shall lay a tracer wire and set test stations along all nonmetallic water line pipe in accordance with City of Wichita Specifications and Tracer Wire Detail on Detail Sheet. Cost is Subsidiary to pipe installation.

Only active building sewer lines which connect actual buildings to the sewer system are to be reconnected to the new sewer construction. Building sewer lines and/or connections which have been abandoned are not to be reconnected to the new sewer construction. It will be the sole responsibility of the Contractor to ascertain which such building sewer lines and/or connections are active and which such sewer and/or connections have been abandoned. All work involved with building sewer line construction and/or building sewer connections shall conform to the applicable section of the standard specifications.

The Contractor shall be responsible for maintaining continuous flow of sewage through construction. Contractor's proposed method for maintaining sewage flow shall be approved by the Engineer. Cost of maintaining flow of sewage through construction will not be paid for directly and this cost shall be considered as Subsidiary to the other pay items of work.

Install new standard manhole frames and covers on all existing storm water and sanitary sewer manholes located in new pavement. Old frames and covers shall be taken to the City Yard at 1801 S. McLean Blvd. for salvage. Sanitary sewer covers shall have the lettering "City of Wichita Sewer Dept.". Storm water sewer covers shall have the lettering "City of Wichita Storm Water".

Contractor to support all underground utilities during construction.

Cost of excavation, hauling, and dumping of excess excavation shall be Subsidiary to the project.

Construction Traffic Control: Two way traffic will be maintained through construction. The Contractor shall install and operate Temporary Traffic Signals as required by the Signalization Plans and Details.

All elevations shown are City Datum. City Datum = NGVD - 1187.40

All temporary paving and sidewalk patching for storm sewer, sanitary sewer, and water shall be Subsidiary to Traffic Control.

All storm sewer to be abandoned or removed, cost shall be Subsidiary to other storm sewer items.

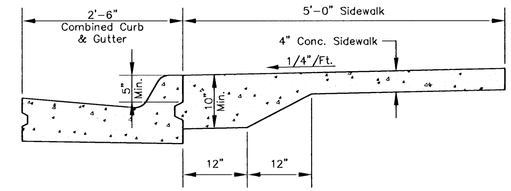

CURB & SIDEWALK TIE-IN DETAIL

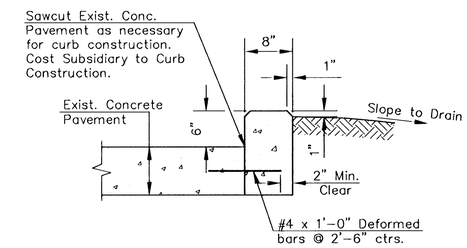

8" CONCRETE CURB DETAIL

Seneca Sta. 39+89.0 to Sta. 40+08.8, Rt.

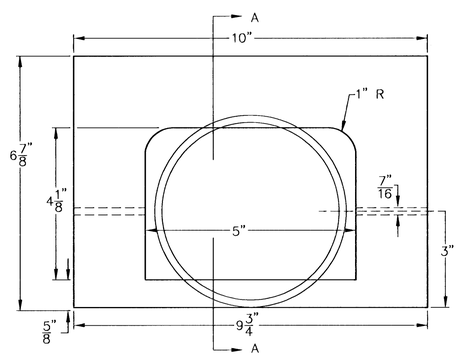

CURB CASTING DETAIL

@ FACE OF CURB

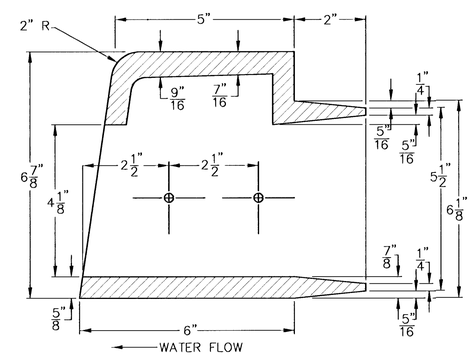

CURB CASTING SECTION A-A

NOTE: INSTALL CURB CASTING, DEETER #2449-8 OR APPROVED EQUAL, AT CURB & GUTTER. CASTING UNIT SHALL BE ANCHORED WITH GALVANIZED 3/8" X 2 1/2" BOLTS. CASTING SHALL BE PAINTED WITH TWO COATS OF GREY PAINT, APPLIED IN ACCORDANCE WITH MANUFACTURERS RECOMMENDATION.

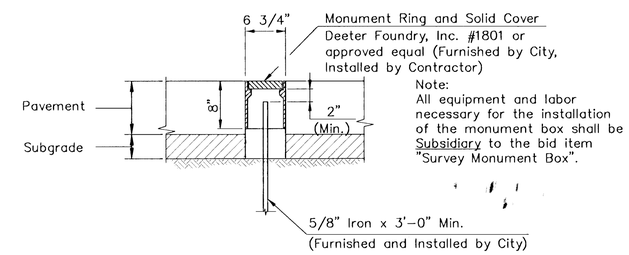

SURVEY MONUMENT BOX DETAIL

MID-KANSAS ENGINEERING CONSULTANTS, INC.
411 N. WEBB ROAD
WICHITA, KS. 67206
316-684-9600

SENECA PAVING PLANS (PROJECT NAME)		
GENERAL NOTES (SHEET TITLE)		
DCH (DESIGN BY)	WNJ (DRAWN BY)	DCH (CHECKED BY)
OCT. 2001 (DATE)	98092NOT (JOB NO.)	2 / 87 (SHEET/OF)

G:\CIVIL\98092\PAVE\98092not.dwg Wed Oct 24 14:31:07 2001