FHWA REGION NO.	STATE	PROJECT NUMBER	FISCAL YEAR	SHEET NUMBER	TOTAL SHEETS
7	KANSAS	87N-0080-01	1997	6	162

	BY	DATE
REFERENCES NOTED		
REFERENCES CHECKED		

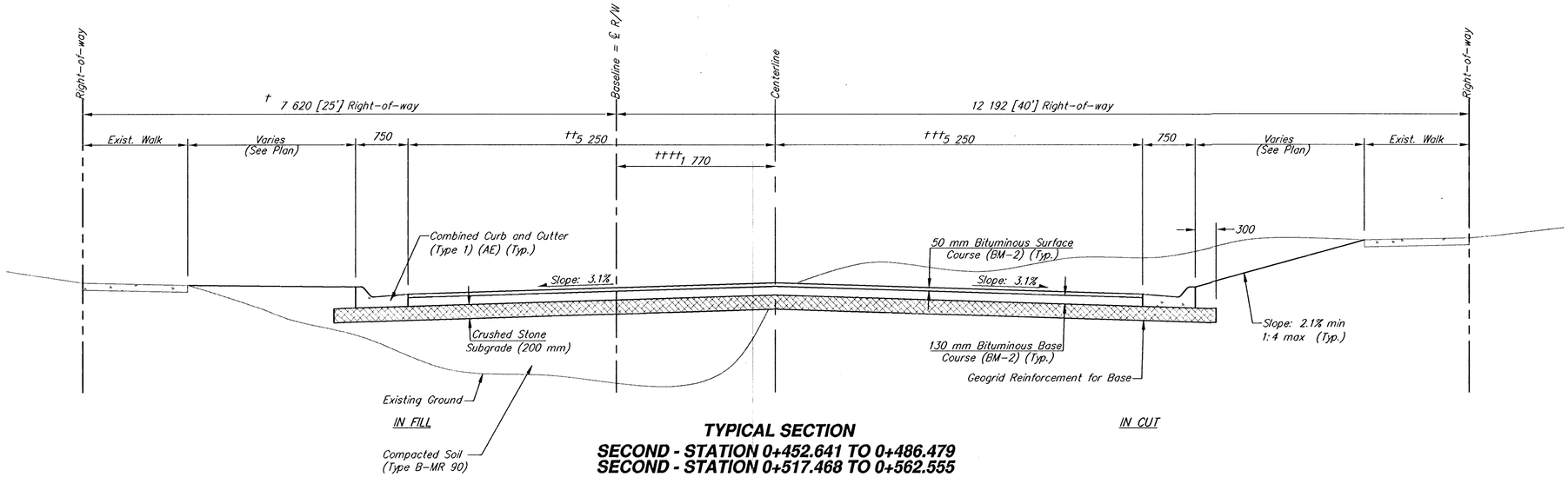

TYPICAL SECTION
SECOND - STATION 0+452.641 TO 0+486.479
SECOND - STATION 0+517.468 TO 0+562.555

† 12 192 [40'] from Station 0+517.468 to 0+562.555
†† Tapers from 4 000 at Station 0+452.641 to 5 250 at Station 0+468.830
††† Tapers from 4 000 at Station 0+452.641 to 5 250 at Station 0+468.763
Tapers from 5. 250 at Station 0+539.001 to 4 060 at Station 0+562.555
†††† 1 770 from Station 0+500.000 to 0+539.001
Tapers from 1 770 at Station 0+539.001 to 0 612 at Station 0+562.555

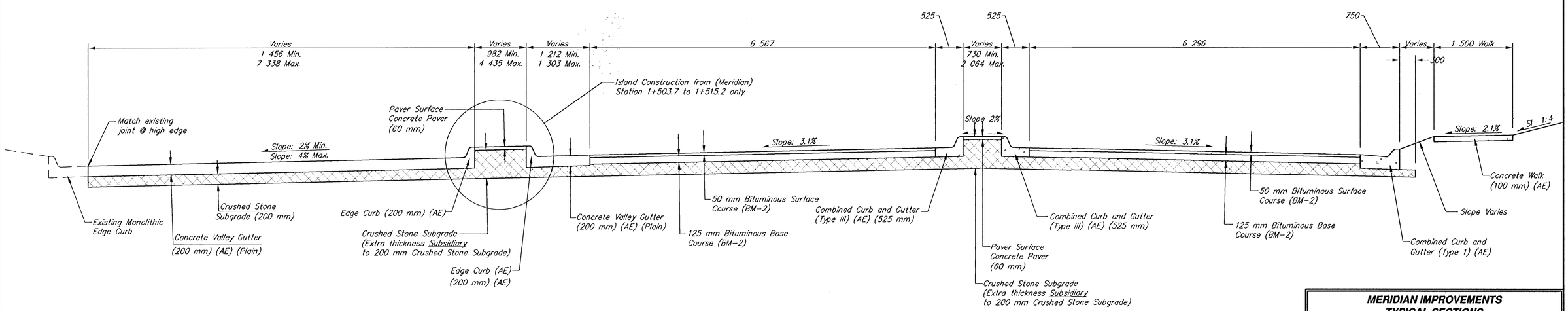

TYPICAL SECTION
MERIDIAN - STATION 1+478 485 TO
McLEAN - STATION 0+043 014

MERIDIAN IMPROVEMENTS
TYPICAL SECTIONS

SRB 924 NORTH MAIN WICHITA KANSAS 67203 http://www.feist.com/~srb
316-264-8008 FAX 264-4621 E-Mail: srb@feist.com
SAVOY, RUGGLES & BOHM, P.A.
ENGINEERING & SURVEYING

PROJECT NUMBER 472-76-245-82740-000-000-001

DRAWN	DESIGN	REVIEW	DATE	UTILITY	SRB JOB
J Lang/TEB	T C R	TCR	Jan. 9, 1999		539T

REVISED

SHEET 6 OF 162