FHWA REGION NO.	STATE	PROJECT NO.	YEAR	SHEET NO.	TOTAL SHEETS
7	KANSAS	STP-N012(901)	1999	55	131

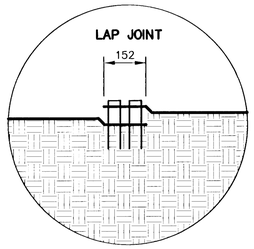

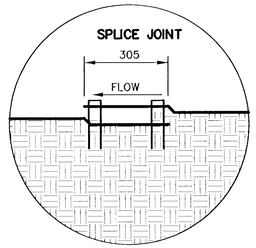

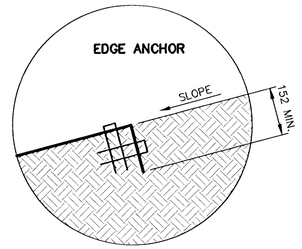

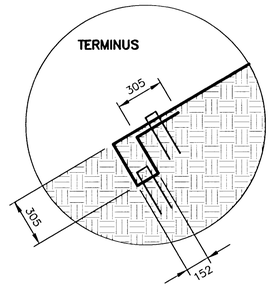

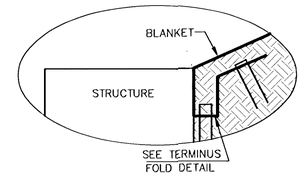

INSTALLATION DETAILS FOR PERMANENT EROSION CONTROL

CONTRACTOR SHALL INSTALL NORTH AMERICAN GREEN C-350 OR EQUAL AFTER SEEDING PER MANUFACTURER'S SPECIFICATIONS, WITH "D" STAPLE PATTERN (3.5 STAPLES/m2). EROSION MAT SHALL EXTEND FROM INLET WALL UP SIDESLOPE TO EXIST. GROUND ELEVATION (SEE PROFILE). EROSION MAT SHALL BE LAID LOOSELY IN THE DIRECTION OF FLOW, WITH THE FIRST COURSE AT THE TOP OF INLET WALLS, WHERE APPLICABLE. IN ORDER FOR BLANKET TO BE IN CONTACT WITH THE SOIL, LAY BLANKET LOOSELY, AVOIDING STRETCHING. ALL EDGES SHALL BE TRENCHED. CONTRACTOR SHALL REQUEST A MANUFACTURER'S TECHNICAL REPRESENTATIVE BE ON SITE DURING INSTALLATION TO APPROVE INSTALLATION PROCEDURE'S.

1. LONGITUDINAL LAP JOINTS: THE ADJACENT EDGES OF THE BLANKET SHOULD OVERLAP A MINIMUM OF 152 mm, WITH STAPLES CATCHING THE EDGES OF BOTH BLANKETS.
2. SPLICE JOINT: WHEN SPLICES ARE NECESSARY, OVERLAP END A MINIMUM OF 305 mm IN DIRECTION OF WATER FLOW. STAGGER SPLICE SEAMS.
3. EDGE ANCHOR: LAY OUTSIDE EDGE OF BLANKET INTO TRENCH AT TOP OF SIDE SLOPE. STAPLE AT 915 mm INTERVALS ALONG TRENCH.
5. TERMINUS: THE BOTTOM EDGE OF THE BLANKET SHALL BE STAPLED IN PLACE WITH STAKES SPACED AT 229 mm INTERVALS ALONG THE TERMINATING EDGE.

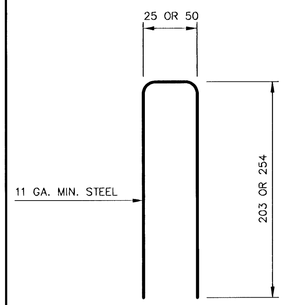

STAPLE DETAIL

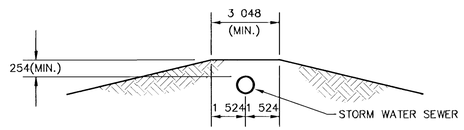

PROTECTIVE FILL DETAIL

MINIMUM PROTECTIVE FILL SHALL BE PROVIDED IN ALL INSTANCES WHERE COVER OVER THE PROP. STORM WATER SEWER LINE IS LESS THAN (1) FOOT. (COST SUBSIDIARY TO PIPE INSTALLATION)

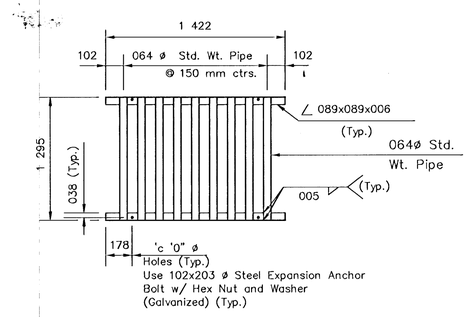

GRATE DETAIL

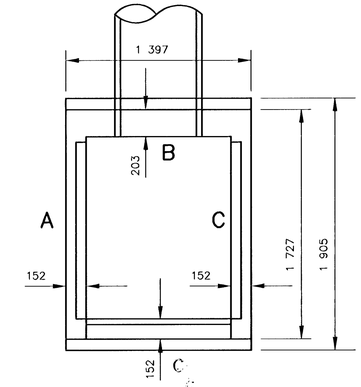

PLAN

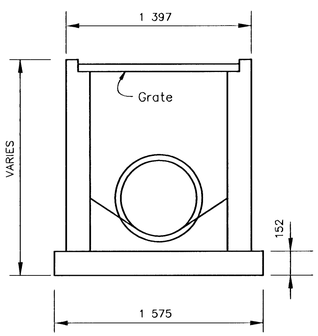

SIDE B ELEVATION

TYPE II DITCH INLET

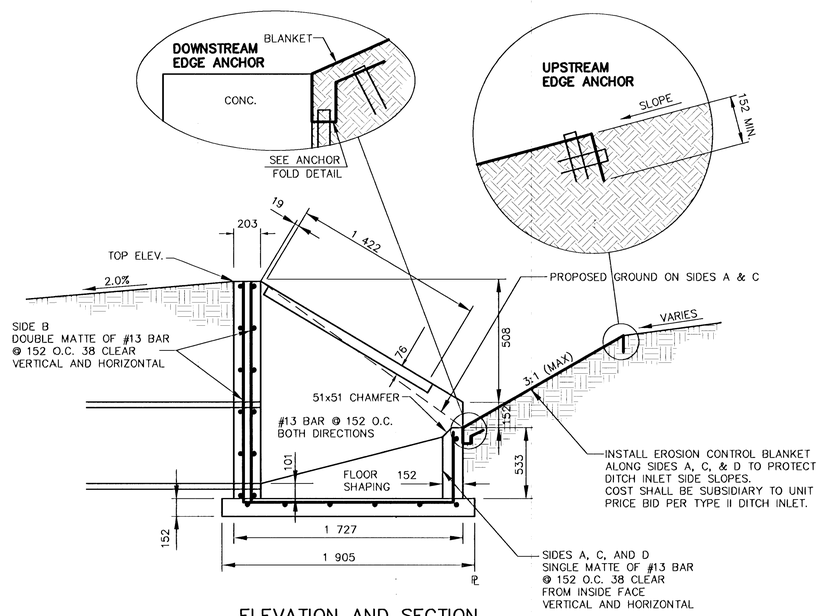

ELEVATION AND SECTION

GENERAL NOTES

CLASS A CONCRETE (AE) SHALL BE USED THROUGHOUT. BEVEL ALL EXPOSED EDGES WTH A 'w" TRIANGULAR MOLDING OR AN APPROVED EDGING TOOL. NO DEDUCTIONS IN CONCRETE QUANTITIES HAVE BEEN MADE FOR PIPE OPENINGS.

REINFORCING STEEL SHALL BE A MINIMUM GRADE 60 ASTM A615.

ALL DIMENSIONS RELATIVE TO PLACEMENT OF REINFORCING ARE TO THE CENTERLINE OF BARS UNLESS OTHERWISE NOTED. ALL CLEARANCES ARE 38 mm UNLESS OTHERWISE NOTED.

PIPES WILL ENTER AND LEAVE THE INLET AT VARIOUS POSITIONS. FIELD BEND OR CUT REINFORCING TO CLEAR PIPES.

ALL EXPOSED STRUCTURAL STEEL SURFACES SHALL BE GALVANIZED AFTER FABRICATION IN ACCORDANCE WITH ASTM DESIGNATION A123. FASTENERS SHALL BE GALVANIZED IN ACCORDANCE WITH ASTM DESIGNATION A153.

INLETS SHALL BE MEASURED AND PAID FOR AT THE CONTRACT UNIT PRICE BID PER EACH OF THE VARIOUS SIZES AND TYPES AS SHOWN ON THE PLANS. THIS SHALL BE CONSIDERED FULL COMPENSATION FOR ALL EXCAVATION, BACKFILLING, MATERIALS, LABOR, EQUIPMENT, TOOLS AND INCIDENTALS NECESSARY TO COMPLETE THE WORK.

MID-KANSAS ENGINEERING
CONSULTANTS, INC.
411 N. WEBB ROAD
WICHITA, KS. 67206
316-684-9600

PAWNEE AVE. - ROCK RD. TO WEBB RD.
PROJECT NAME

TYPE II DITCH INLET
SHEET TITLE

JTC	GJR	JTC/GJA
DESIGN BY:	DRAWN BY:	CHECKED BY:
JUNE 1999	98171DD2	55 / 131
DATE	JOB NO.	SHEET/OF

G:\CIVIL\PAW-WEBB\98171\DETAILS\98171DD2.DWG Mon Jul 17 16:02:06 2000