FHWA REGION NO.	STATE	PROJECT NUMBER	FISCAL YEAR	SHEET NUMBER	TOTAL SHEETS
7	KANSAS	87N-0128-01	.	58	118

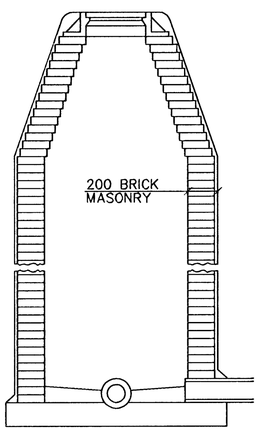

TYPE A
SINGLE WALL BRICK MASONRY

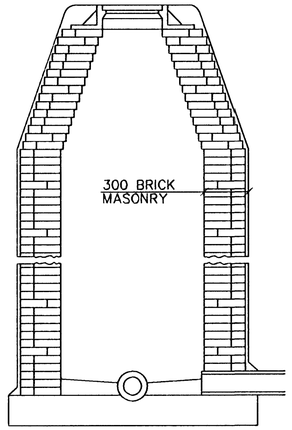

TYPE B
DOUBLE WALL BRICK MASONRY

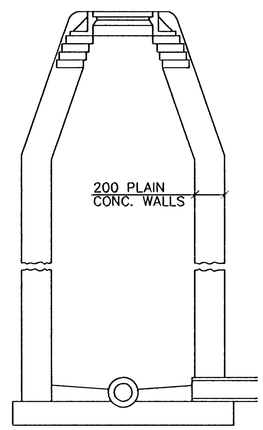

TYPE C
CAST IN PLACE
(TYPE D IS PLASTIC LINED & HAS BRICK DRAW)

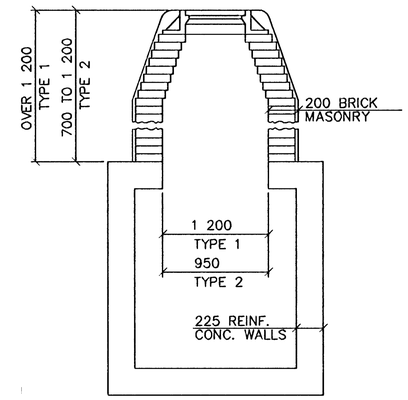

TYPE 1 & 2
REINFORCED CONCRETE

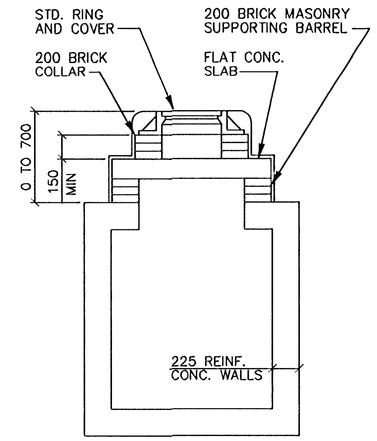

TYPE 3
REINFORCED CONCRETE

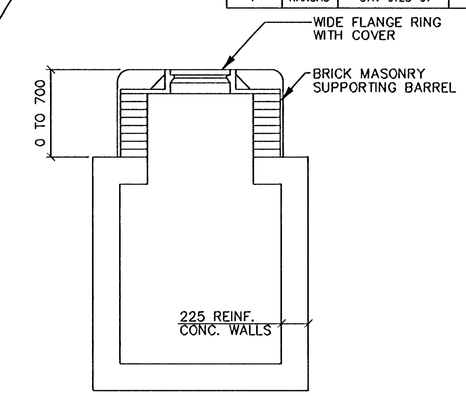

TYPE 4
REINFORCED CONCRETE
(WIDE FLANGE RING)

DEFINITION SKETCHES – CITY OF WICHITA STANDARD MANHOLES

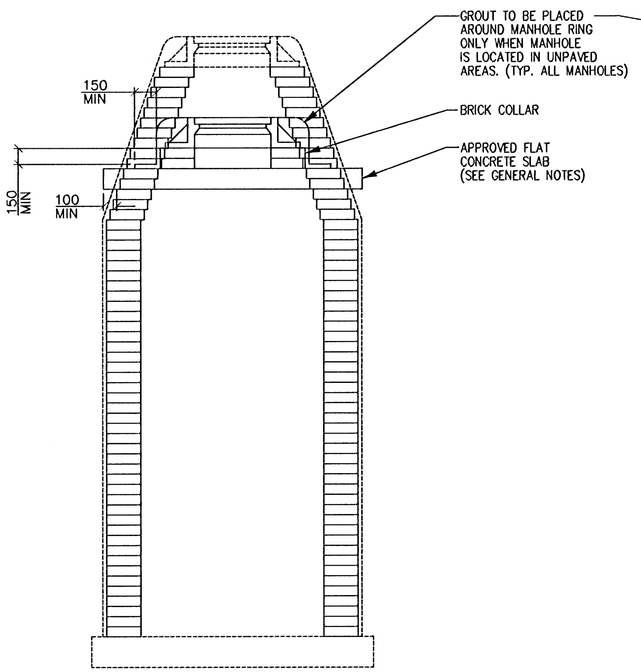

DOWNWARD ADJUSTMENT
(GREATER THAN 300 mm)
ALL TYPES

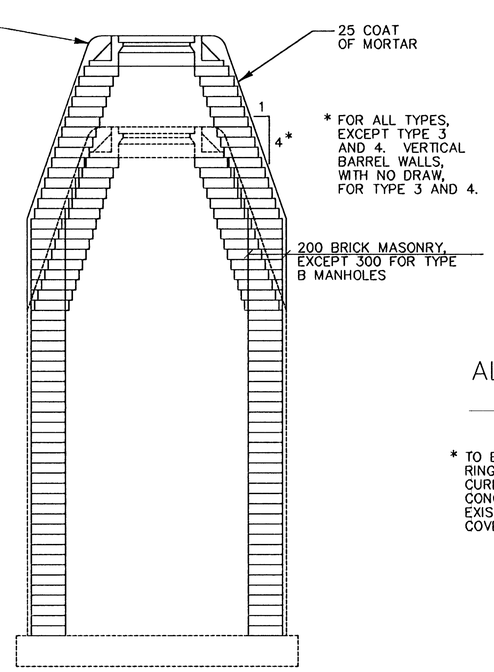

UPWARD ADJUSTMENT
(GREATER THAN 300 mm)
ALL TYPES

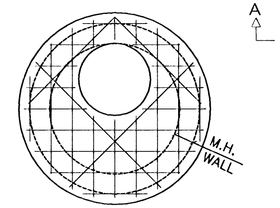

* PLAN
ALTERNATE OPENING LOCATION

* TO BE USED ONLY IF NECESSARY TO KEEP RING AND COVER FROM CONFLICTING WITH CURB OR COMBINED CURB AND GUTTER. FLAT CONCRETE SLAB SHALL BE ROTATED ON EXISTING MANHOLE TO POSITION RING AND COVER IN PAVEMENT OR BEHIND CURB.

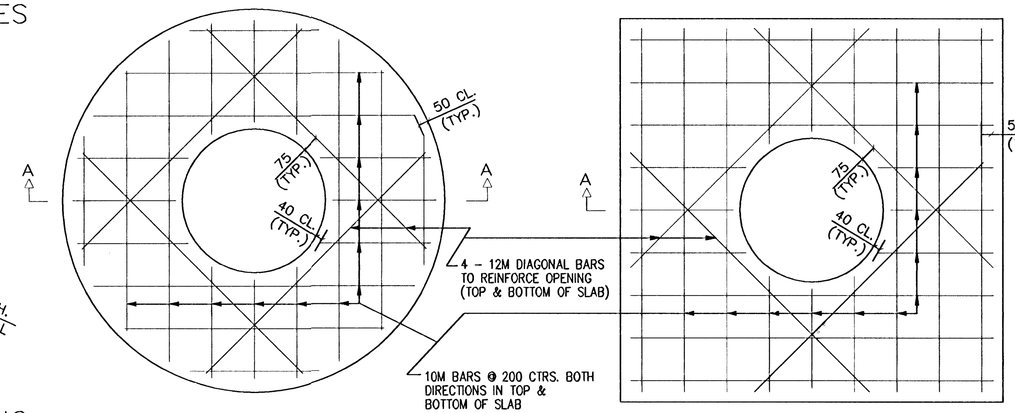

PLAN

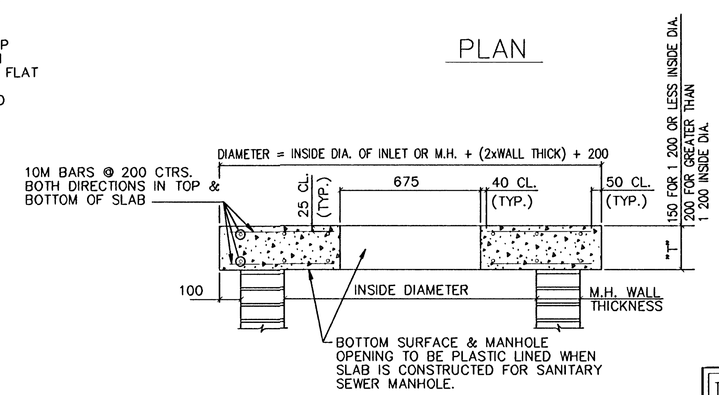

SECTION A – A

THE APPROPRIATE PORTIONS OF THE DRAW AND BARREL OF TYPE A, B, C, D, 1 AND 2 MANHOLES SHALL BE REMOVED. A FLAT CONCRETE SLAB SHALL BE PLACED AND THE RING AND COVER RESET. ALL WORK AND MATERIALS SHALL CONFORM TO THE DETAILS SHOWN AND THE GENERAL NOTES.

COURSES OF BRICK BARREL SUPPORTING THE WIDE FLANGE RING FOR TYPE 4 MANHOLES AND FLAT CONCRETE SLAB FOR TYPE 3 MANHOLES SHALL BE REMOVED AS NECESSARY PRIOR TO RESETTING THE WIDE FLANGE RING OR FLAT CONCRETE SLAB AND RING. ALL WORK AND MATERIALS SHALL CONFORM TO THE DETAILS SHOWN AND THE GENERAL NOTES.

THE ENTIRE DRAW OF TYPES A, B, C, D, 1 AND 2 MANHOLES SHALL BE REMOVED, THE MANHOLE BARREL RAISED THE APPROPRIATE AMOUNT, A NEW DRAW CONSTRUCTED, AND THE RING AND COVER RESET. THE UPPER PORTION OF TYPE 3 MANHOLES SHALL BE REMOVED TO THE BOTTOM OF THE FLAT CONCRETE SLAB, THE BRICK MASONRY BARREL SUPPORTING THE SLAB SHALL BE RAISED THE APPROPRIATE AMOUNT, AND THE SLAB AND RING AND COVER RESET. THE WIDE FLANGE RING AND COVER OF TYPE 4 MANHOLES SHALL BE REMOVED, THE BRICK MASONRY BARREL SUPPORTING THE RING SHALL BE RAISED THE APPROPRIATE AMOUNT AND THE RING AND COVER RESET. ALL WORK REQUIRED FOR A GREATER THAN 300 mm UPWARD ADJUSTMENT OF ANY MANHOLE SHALL BE ACCOMPLISHED WITH BRICK MASONRY IN ACCORDANCE WITH THE DETAILS SHOWN AND THE GENERAL NOTES.

FLAT CONCRETE SLAB DETAILS

THE CITY OF WICHITA
CITY ENGINEER'S OFFICE
CITY HALL – SEVENTH FLOOR
455 NORTH MAIN STREET
WICHITA, KANSAS 67202
(316) 268-4501
(316) 268-4174 FAX

INLET / MANHOLE ADJUSTMENT DETAILS

M. E. LINDEBAK P.E. – CITY ENGINEER

PROJECT NUMBER 472-83057 | OCA #

DATE MAR '96 | SHEET 58 OF 118