FHWA REG NO.	STATE	PROJECT NO.	YEAR	SHEET NO	TOTAL SHEETS
7	Kansas	87N-0195-01	2001	37A	127

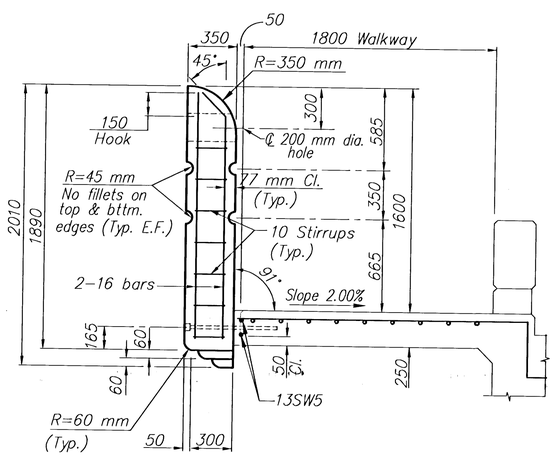

SECTION

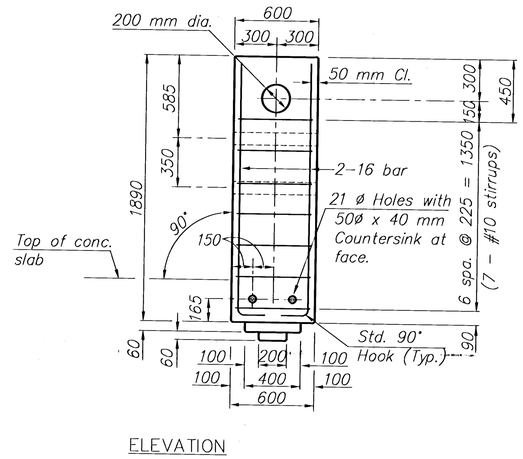

ELEVATION

PRECAST CONCRETE COLUMN DETAIL

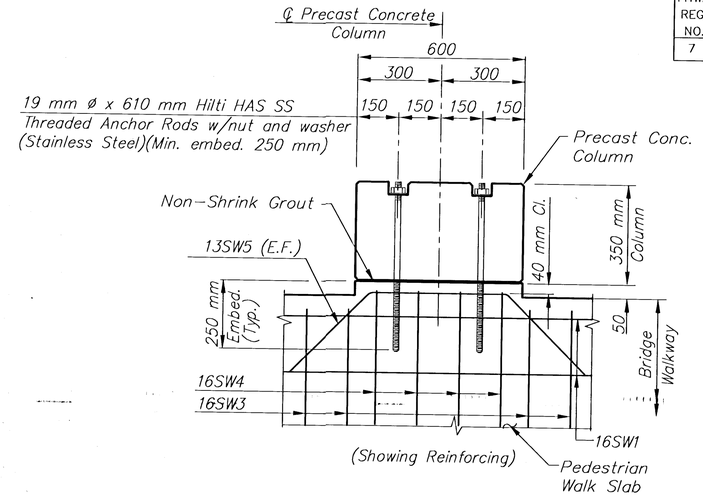

PRECAST CONC. COLUMN PLAN

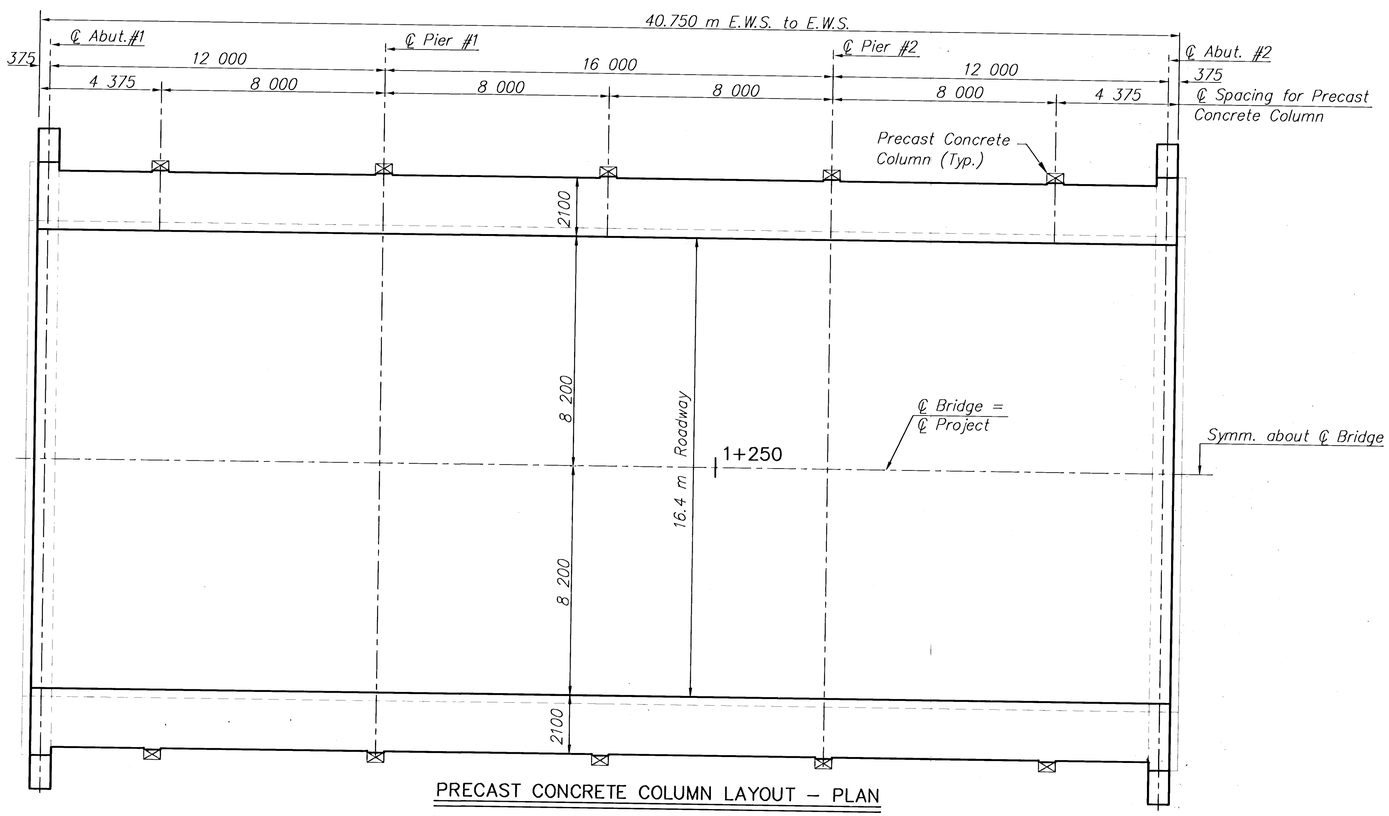

PRECAST CONCRETE COLUMN LAYOUT – PLAN

NOTE:

1. The Precast Concrete Columns shall be installed following a minimum of 14 days after the sidewalks have been cast.
2. All exposed surfaces of the Precast Concrete Columns shall receive a Concrete Masonry Coating.
3. Use 9 mm fillet on all concrete edges of the Precast Concrete Column except as noted.
4. Use galvanized metal shims to adjust vertical alignment of precast columns. Fill void with non-shrink grout between column and sidewalk.
5. Use Hilti HVA adhesive anchoring system with Hilti HAS SS threaded anchor rods or equal. Minimum embedment of Precast Concrete Column anchors is 250 mm.

SRB
924 NORTH MAIN
WICHITA, KANSAS 67203
316-264-8008
FAX 264-4621
SAVOY, RUGGLES & BOHM, P.A.
ENGINEERING & SURVEYING

MKEC
ENGINEERING CONSULTANTS
411 N. WEBB ROAD
WICHITA, KS. 67206
316-684-9600

MAPLE STREET BRIDGE (OVER CALFSKIN CREEK)
PROJECT NAME

MISCELLANEOUS BRIDGE DETAILS
SHEET TITLE

MDK	DPG	MDK
DESIGN BY:	DRAWN BY:	CHECKED BY:
NOVEMBER 2001	00142PE2	37A / 127
DATE	DRAWING NAME	SHEET / OF

H:\CIVIL\00142\BRIDGE\00142PE2.DWG Wed Nov 21 11:56:45 2001
H:\CIVIL\00142\BRIDGE\00142PE2.DWG