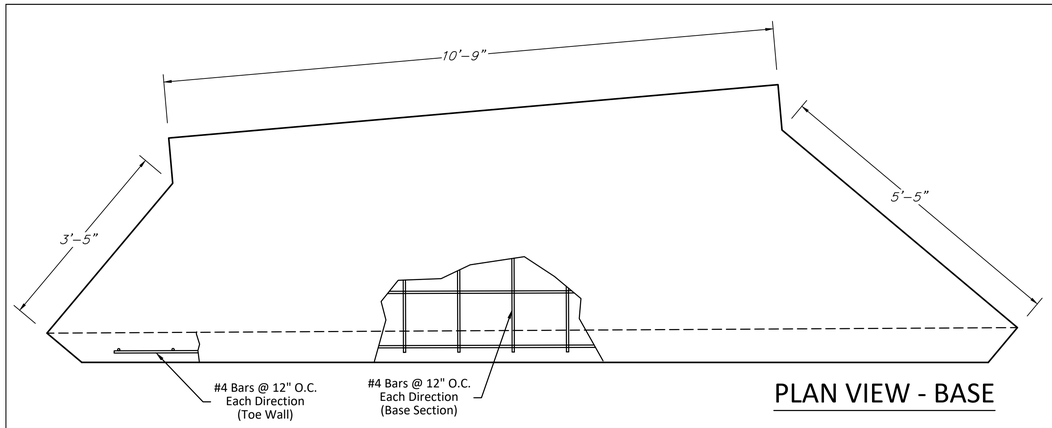

PLAN VIEW - BASE

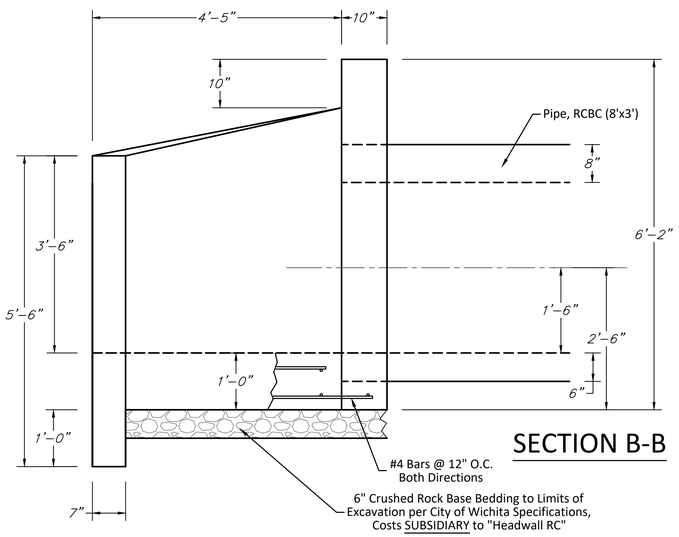

SECTION B-B

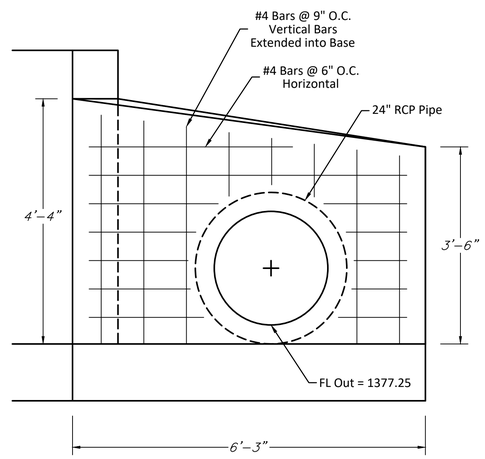

SECTION C-C

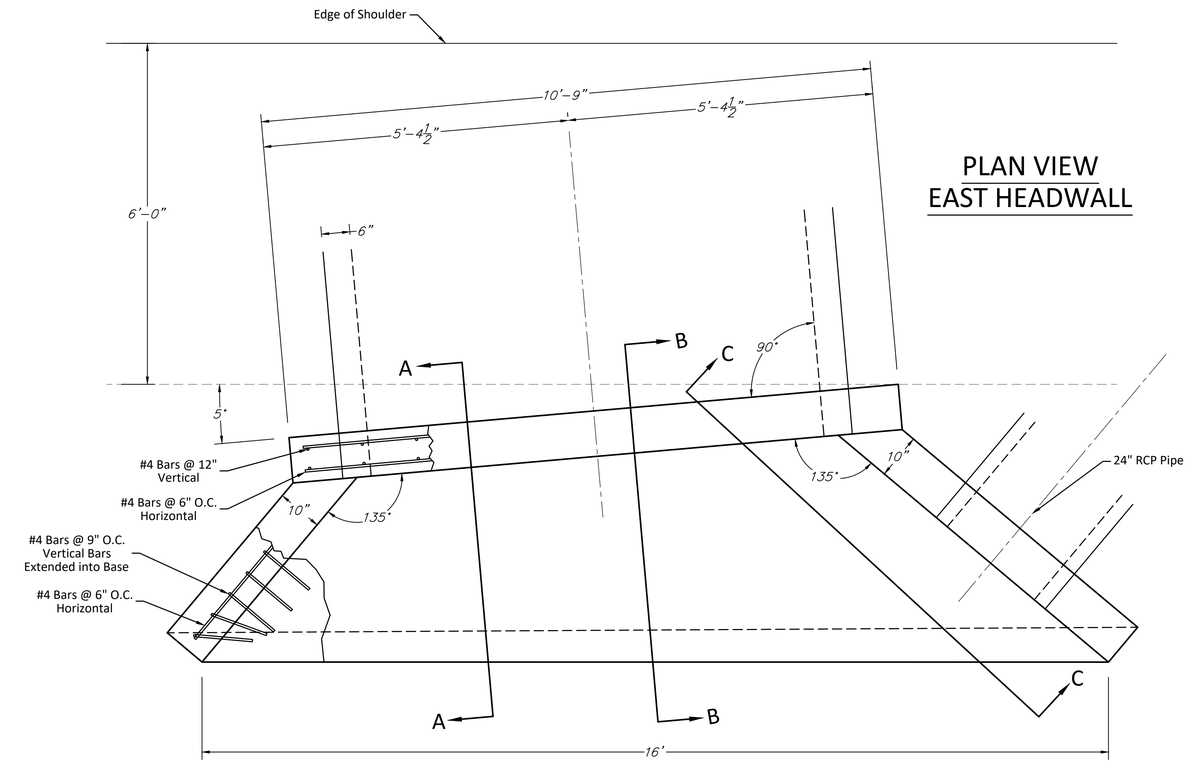

PLAN VIEW
EAST HEADWALL

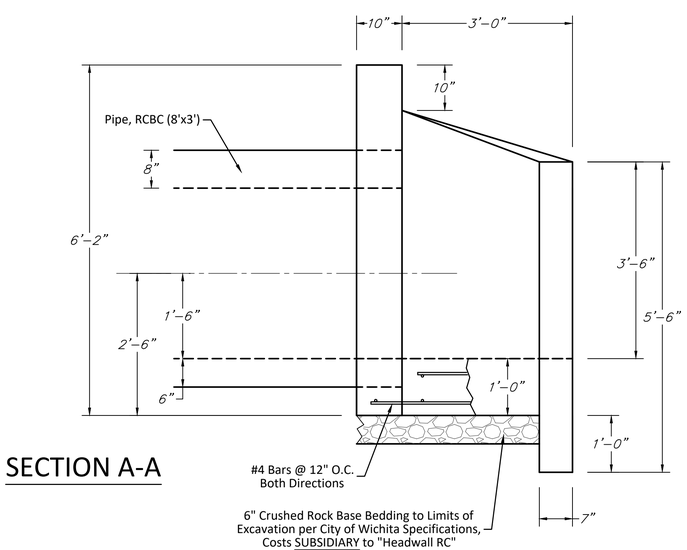

SECTION A-A

*Pipe Quantity from Outside Edge of Headwall to Outside Edge of Headwall.

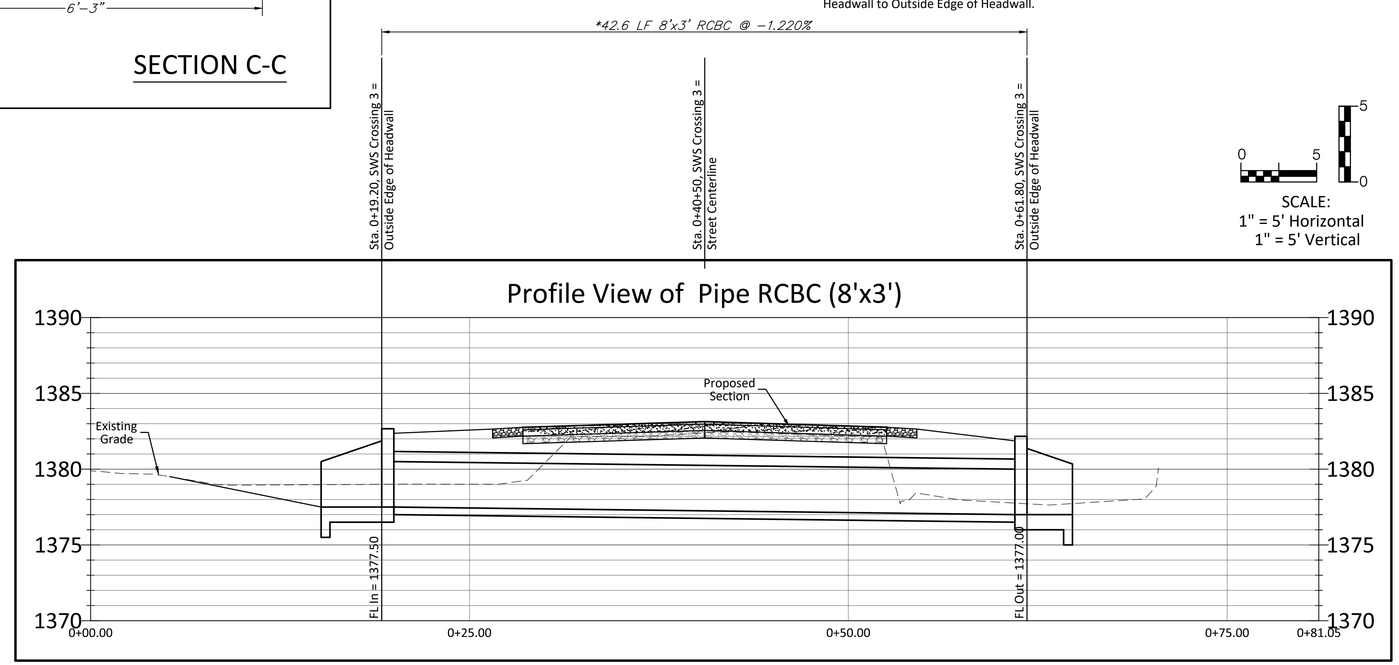

0 5 5 0

SCALE:
1" = 5' Horizontal
1" = 5' Vertical

BAUGHMAN COMPANY
315 Ellis St. Wichita, KS 67211 316-262-7271
BaughmanCo.com
BAUGHMAN

CAPITAL IMPROVEMENT PROJECT
STORMWATER PLANS
SWS CROSSING 3
29TH & 127TH STREET PAVING

PROJECT NUMBER: 472-85341
INTERNAL NUMBER: 17-02-E657
DESIGN: LP
DRAWN: LP
DATE: Dec, 2017

Dir: C:\PROJECTS\127TH & 29TH PAVING - 2-02-17\17-02-E657 SWS\PAVI BASE.DWG