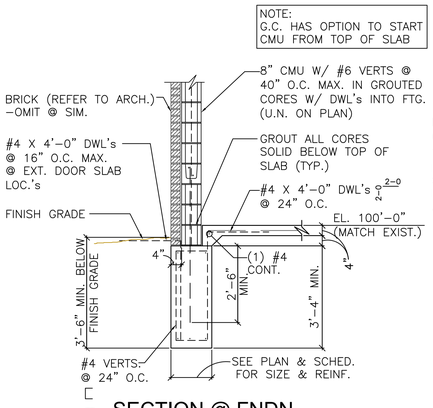


A SS2.1 SECTION @ FNDN.
SCALE: 1/2"=1'-0"

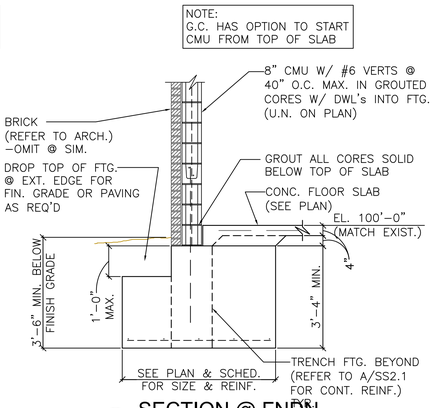


B SS2.1 SECTION @ FNDN.
SCALE: 1/2"=1'-0"

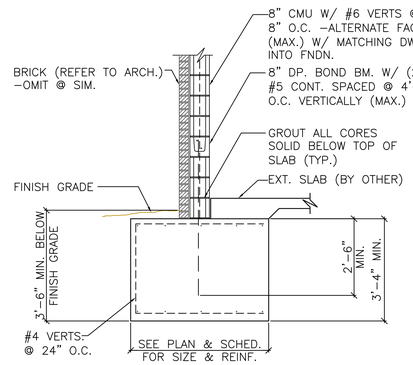


C SS2.1 SECTION @ FNDN.
SCALE: 1/2"=1'-0"

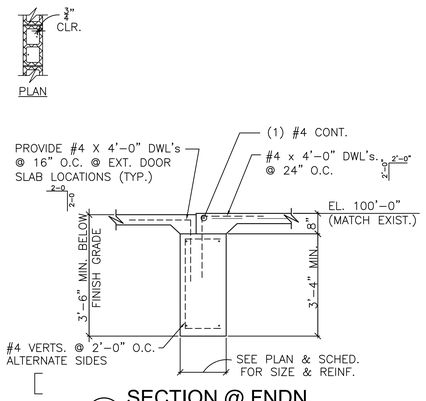


D SS2.1 SECTION @ FNDN.
SCALE: 1/2"=1'-0"

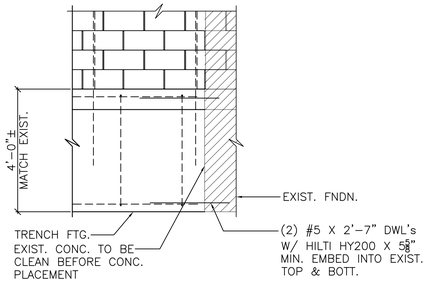


E SS2.1 SECTION @ FNDN.
SCALE: 1/2"=1'-0"

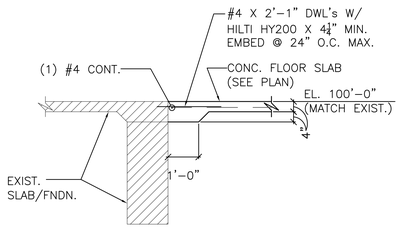


F SS2.1 SECTION @ FNDN.
SCALE: 1/2"=1'-0"

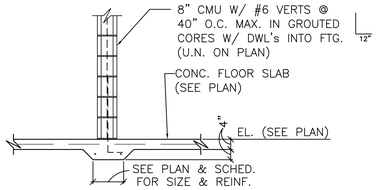


G SS2.1 SECTION @ FNDN.
SCALE: 1/2"=1'-0"

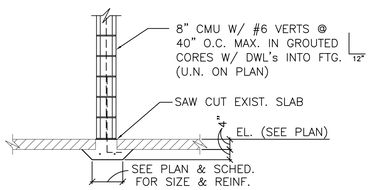


H SS2.1 SECTION @ FNDN.
SCALE: 1/2"=1'-0"

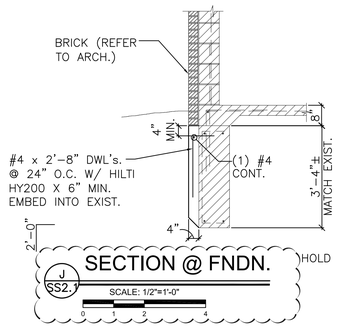


J SS2.1 SECTION @ FNDN.
SCALE: 1/2"=1'-0"

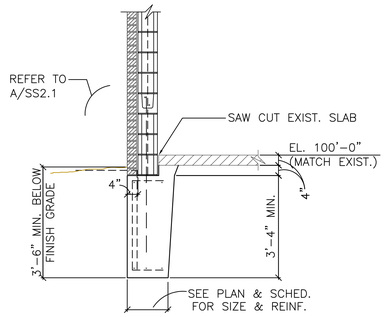


K SS2.1 SECTION @ FNDN.
SCALE: 1/2"=1'-0"

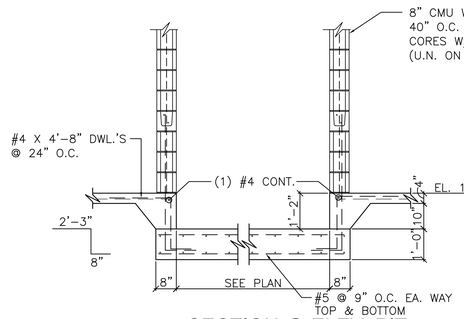


L SS2.1 SECTION @ ELEV. PIT
SCALE: 1/2"=1'-0"

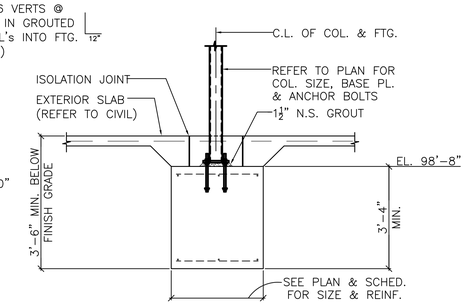


M SS2.1 SECTION @ FNDN.
SCALE: 1/2"=1'-0"

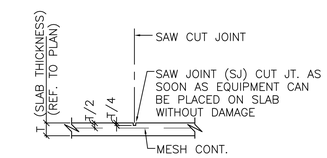


1 S0.1 TYP. SAW CUT JT.
SCALE: 1/2"=1'-0"

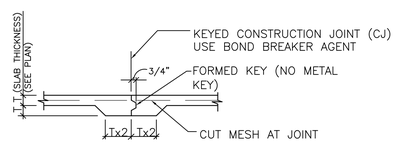


2 S0.1 TYP. SLAB CONST. JT.
SCALE: 1/2"=1'-0"
(MAY BE USED IN LIEU OF SAW CUT JOINT)

MKEC
Wichita, KS • 316.684.9600

INDOOR FACILITY AND STADIUM IMPROVEMENTS
**STRYKER SPORTS**
WICHITA, KANSAS

RUSSELL EDWARD HEMPEL
16793
KANSAS
PROFESSIONAL ENGINEER
7/MAR/18

©2018
MKEC Engineering
All Rights Reserved
www.mkec.com
These drawings and their contents, including, but not limited to, all concepts, designs, & ideas are the exclusive property of MKEC Engineering (MKEC), and may not be used or reproduced in any way without the express consent of MKEC.

FOOTING & FOUNDATION SECTIONS

| | |
|---|---|
| PROJECT NO. | 1701010567 |
| DATE | 03-07-18 |
| SCALE | SEE PLAN |

| DESIGNED | DRAWN | CHECKED |
|---|---|---|
| RH | RDH | RH |

| NO. | REVISION | DATE |
|---|---|---|
| 0 | ISSUED FOR CONSTRUCTION | 03-07-18 |

SHEET NO.
SS2.1

PLOTTED: Wednesday, March 07, 2018 @ 11:39AM
J:\PROJECTS\2017\1701010567_COW_STRYKER_17056T CADSHTS\06 STRUC\DWGS\STRYKER-17056T-SS2.1.DWG