FHWA REGION NO.	STATE	PROJECT NO.	YEAR	SHEET NO.	TOTAL SHEETS
7	KS.	87-U-1362-01	1993	91	149

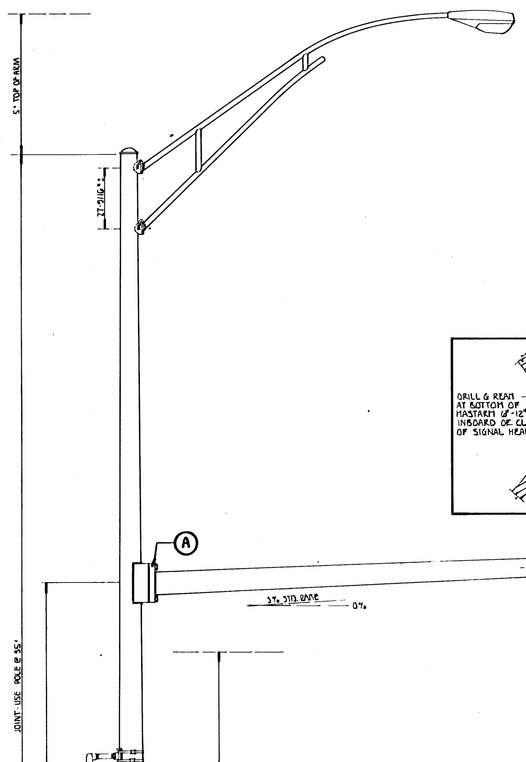

MASTARM MOUNTING DETAIL

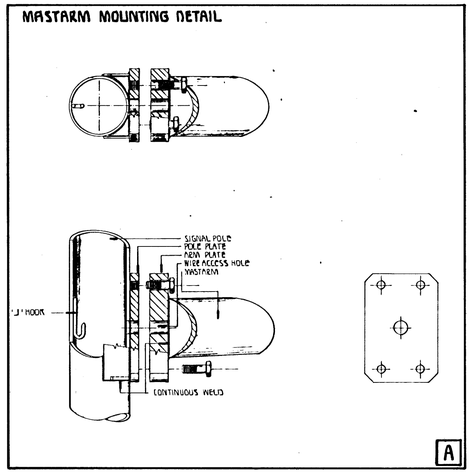

BANDED SIGN MOUNTING BRACKET DETAIL

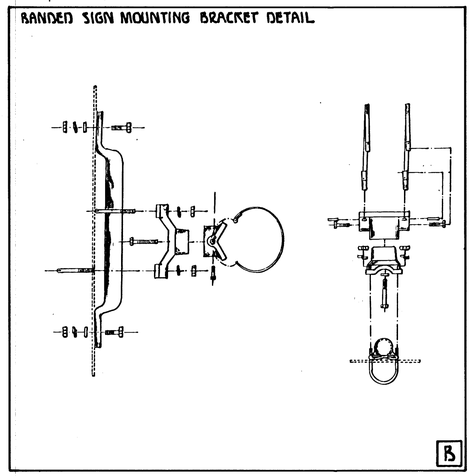

TYPE I SIGNAL MOUNTING BRACKET ASSEMBLY DETAIL

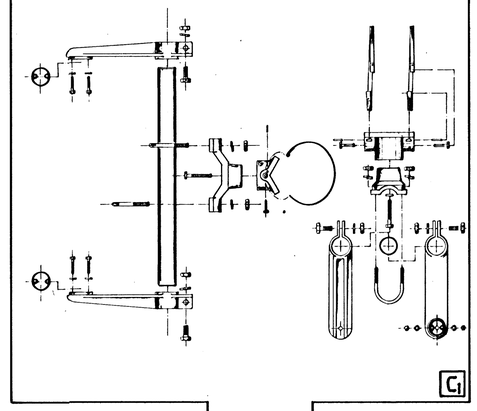

STANDARD SIGNING

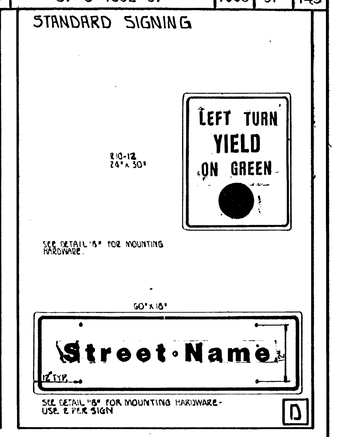

TYPE I SIGNAL MOUNTING BRACKET (ALTERNATE)

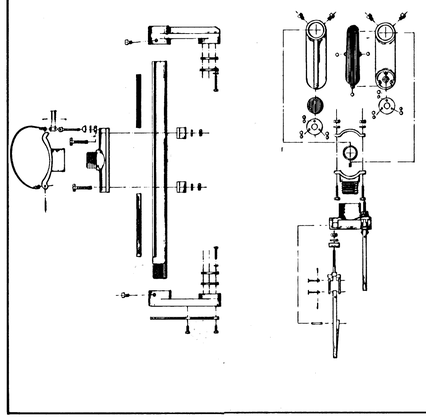

CONCRETE SIGNAL BASE DETAIL

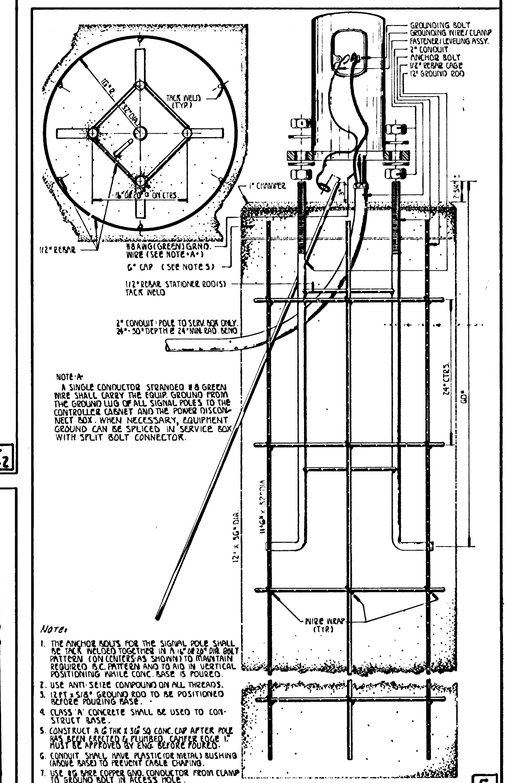

NOTE "A"
A SINGLE CONDUCTOR STRANDED #8 GREEN WIRE SHALL CARRY THE EQUIP. GROUND FROM THE GROUND LUG OF ALL SIGNAL POLES TO THE CONTROLLER CABINET AND THE POWER DISCONNECT BOX. WHEN NECESSARY, EQUIPMENT GROUND CAN BE SPLICED IN SERVICE BOX WITH SPLIT BOLT CONNECTOR.

NOTE:
1. THE ANCHOR BOLTS FOR THE SIGNAL POLE SHALL BE TACK WELDED TOGETHER IN A NEW OF OR ONLY PATTERN (ON CENTERS AS SHOWN) TO MAINTAIN REQUIRED B.C. PATTERN AND TO AID IN VERTICAL POSITIONING WHILE CONC. BASE IS POURED.
2. USE ANTI-SEIZE COMPOUND ON ALL THREADS.
3. 1 1/2" x 5'-6" GROUND ROD TO BE POSITIONED BEFORE POURING BASE.
4. CLASS 'A' CONCRETE SHALL BE USED TO CONSTRUCT BASE.
5. CONSTRUCT A 6" THK x 5'-6" SQ CONC CAP AFTER POLE HAS BEEN ERECTED & PLUMBED. CAPPED SIDE "1" MUST BE APPROVED BY ENG. BEFORE POURED.
6. CONDUIT SHALL HAVE PLASTIC (OR METAL) BUSHING (ABOVE BASE) TO PREVENT CABLE CHAFING.
7. USE #6 WIRE COPPER GND. CONDUCTOR FROM CLAMP TO GROUND ROD IN "ACCESS HOLE".

PEDESTRIAN PUSHBUTTON/SIGN UNIT DETAIL

*NOTE: MESSAGE TO BE CAST WITH HOUSING (ONE PIECE).

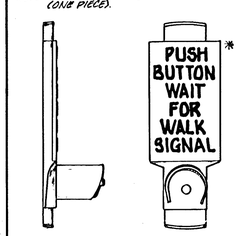

*NOTE: PUSBUTTON IS 3'-6" FROM SIDEWALK FINISH GRADE TO CENTER OF PUSHBUTTON.

POLE BASE ASSEMBLY DETAIL

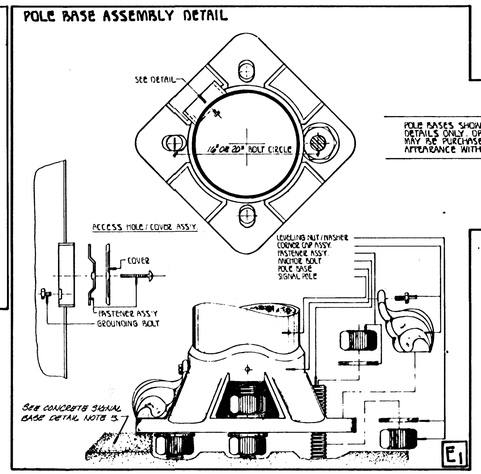

POLE BASES SHOWN ARE FOR ASSEMBLY DETAILS ONLY. OPTIONAL BASES THAT MAY BE PURCHASED MAY VARY IN ACTUAL APPEARANCE WITH MFG. CO.

POLE BASE ASSEMBLY DETAIL (ALTERNATE)

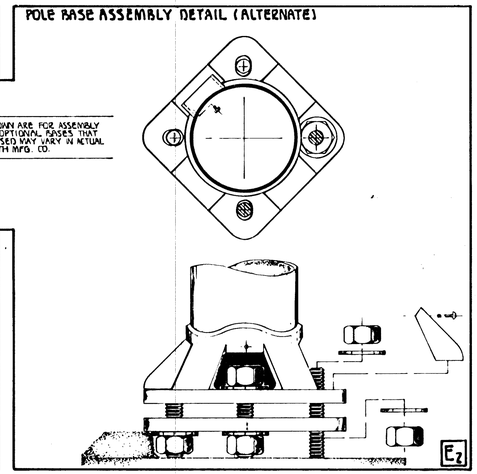

TYPE II OR III SIGNAL MOUNTING BRACKET ASSEMBLY (SIDE-OF-POLE) TYPE II SHOWN

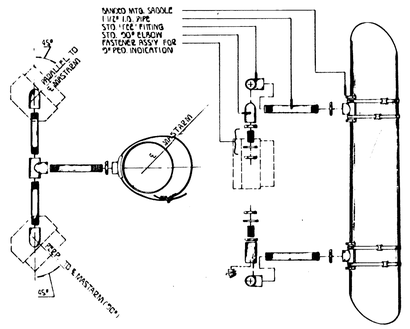

1. DIRECTIONAL ALIGNMENT OF PED. INDICATIONS & BRACKET(S) SHALL BE DETERMINED IN THE FIELD BY THE ENGINEER.
2. THROUGH HOLES IN THE POLE SHALL BE DRILLED AND WELL REAMED TO PREVENT CABLE CHAFING.

REV. DATE	COMMENTS	INIT.
1-27-93	Revised Signal Bd.	LKS
1-27-93	Revised Signal Bd.	LKS
1-27-93	Revised Signal Bd.	LKS