FHWA REGION NO.	STATE	PROJECT NO.	YEAR	SHEET NO.	TOTAL SHEETS
7	KANSAS	87-U-1362-01	1993	105	149

RECOMMENDED SEQUENCE & TRAFFIC HANDLING

PHASE	HANDLING OF TRAFFIC	MAJOR CONSTRUCTION ITEMS	REMARKS
I	Detour signing will be installed. Traffic to be one-way southbound on west side of Webb Road. The contractor will install and operate a temporary traffic signal at the intersection of 21st and Webb until such time as the permanent traffic signal is in operation. The contractor will install the storm sewer system and allow traffic through construction. Two-way traffic will be maintained on 21st street at all times.	Installation or construction of drainage items. Place temporary drainage structures and roadway widening at RCB structures to construct one-half of structure at one time. All entrances, streets and surfaced areas shall be repaired with a like material, or four (4) inches of asphalt may be used to repair the area damaged by storm sewer construction.	Construction will allow continued use of entrances and side streets. The contractor must insure that adequate protection is maintained for all open excavations. Note: The cross road pipe installations shall be available for traffic at the end of the workday. The flowable fill mix design may be modified to produce acceptable strengths for this reduced time constraint.
I A	Traffic to be one-way southbound on east side of Webb Road.	See Phase I	See Phase I
II	Traffic to be one-way southbound on east side of Webb Road. Route two-way traffic on existing surface and temporary widening on south side of 21st street.	Installation or construction of drainage items. Webb Road west lanes will be constructed. One half of existing entrances at Plumthicket, Shannon Woods, and Woodspring to temporarily remain. Complete remaining half of entrances when west lanes are completed and provide temporary asphalt ramps to existing east lanes as required to maintain local traffic. Construct temporary widening along south lanes of 21st. Construct north lanes of 21st Street. Continue temporary pavement striping beyond ends of work area to channel traffic to existing lanes.	Paving operations will be phased at entrances to allow continued use of these points of access during paving of the lanes. The entrances will be completed at this time. The existing traffic movements will be utilized during construction with grade differences being adjusted temporarily with the use of asphalt ramps. Webb Road south bound traffic will be allowed right and left turns at 21st Street.
IIA	Webb Road traffic to be one-way south bound in the completed west lanes. 21st Street two-way traffic to continue in south lanes.	Northeast quadrant of 21st and Webb intersection to be constructed. Temporary asphalt ramp constructed for south bound Webb traffic to access existing 21st roadway.	South bound Webb traffic allowed right and left turns at 21st Street.
III	Traffic to be one-way southbound on west side of Webb Road. Route two-way 21st street traffic onto completed north side of 21st street.	Installation or construction of drainage items. Webb Road east lanes will be constructed. Construct temporary widening at transistion located on 21st at east end of project. 21st street south lanes will be constructed.	South bound Webb traffic allowed right and left turns at 21st. Two permanent type III barricades to be provided at each future sidestreet (3) right stations 78 + 00, 87 + 00, and 89 + 50 at the completion of east lanes of Webb Road. Barricades will become the property of the owner.

General Notes

Two way traffic will be maintaned on 21st street and one way traffic south bound maintained on Webb Road at all times.

All signs and pavement markings conflicting with this traffic control shall be covered or removed as directed by the engineer.

The contractor will install and operate a temproary traffic signal at the intersection of 21st and Webb until such time as the permanent traffic signal is in operation.

As the various construction activities progress, certain situations may arise which will preclude adhering to the original contruction sequence or which in the opinion of the Contractor, would readily adapt themselves to a more efficient phasing operation. Should this occur, the Contractor may submit to the Engineer an alternative plan for approval.

Any revised barrier configuration or construction operation leaving a blunt end of the barrier exposed to approaching traffic without approved protection will not be permitted.

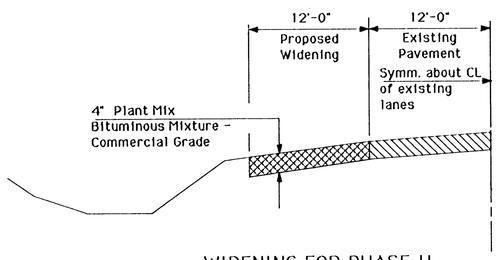

WIDENING FOR PHASE II

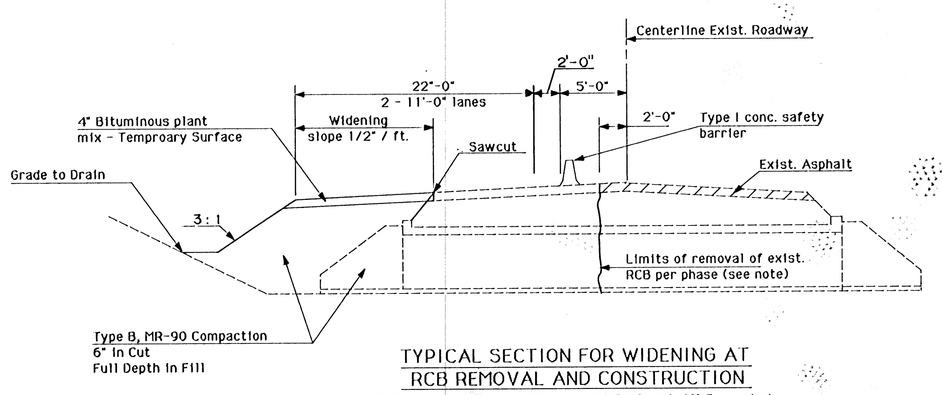

TYPICAL SECTION FOR WIDENING AT RCB REMOVAL AND CONSTRUCTION

NOTE: Where Existing RCB's Are Not Replaced, All Excavated Areas Shall Be Backfilled and Compacted to Type B MR-90 Specifications. All Backfill Material and Methods of Compaction Shall Meet the Engineers Approval. Contractor Shall Maintain Adequate Drainage Through Construction at all Times.

KANSAS DEPARTMENT OF TRANSPORTATION

CONSTRUCTION STAGING SUMMARY

PROJ. NO. 87-U-1362-01 SEDGWICK CO.

MID-KANSAS ENGINEERING CONSULTANTS, INC.
WICHITA, KANSAS

Designed By:	GJA	Checked By:	GJA
Drawn By:	MJV	Date:	Job No.