FHWA REGION NO.	STATE	PROJECT NO.	FISCAL YEAR	SHEET NO.	TOTAL SHEETS
7	KANSAS	87N-0094-01	1998	146	202

SERVICE BOX CONSTRUCTION/INSTALLATION DETAILS

PRE-CAST CONCRETE SERVICE BOX

(915 mm I.D. X 1372 mm RCP) with 152 mm CAP

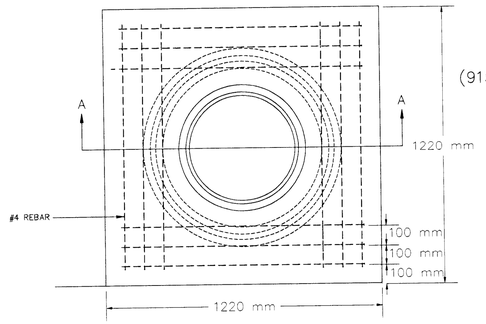

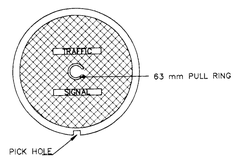

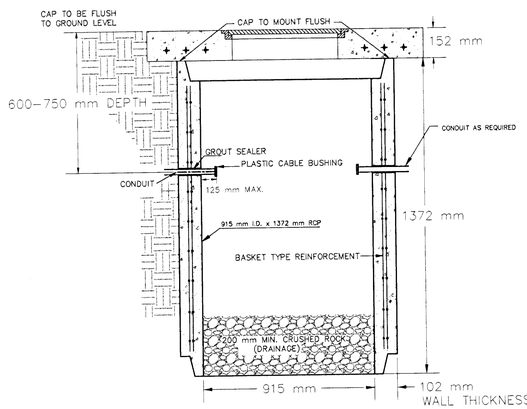

SECTION A-A

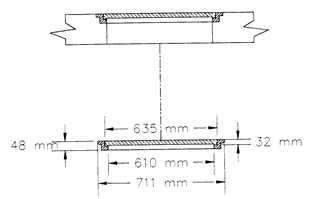

RING & COVER DETAIL

170 CONTROLLER PAD DETAILS

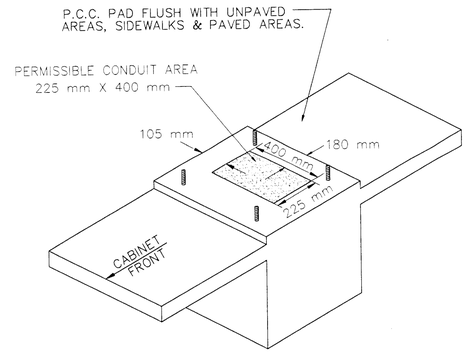

REBAR SHALL BE ASTM A615M GRADE 300 MEETING THE REQUIREMENTS OF SUBSECTION SPECIFICATIONS.

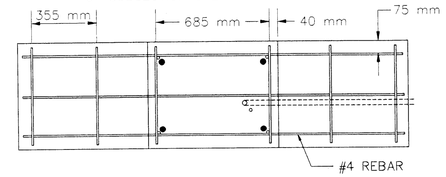

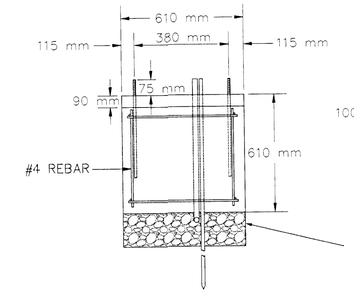

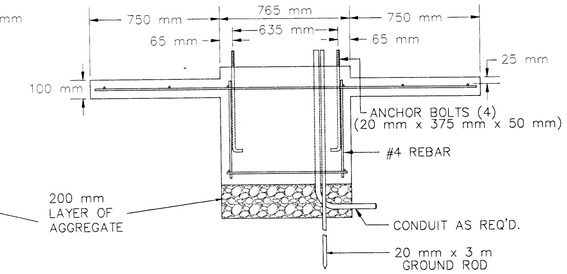

JUNCTION BOX DETAILS

PRE-FAB Junction Box
(610 mm I.D. X 915 mm R.C.P.)

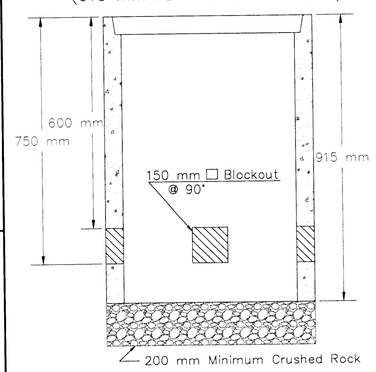

SECTION A-A

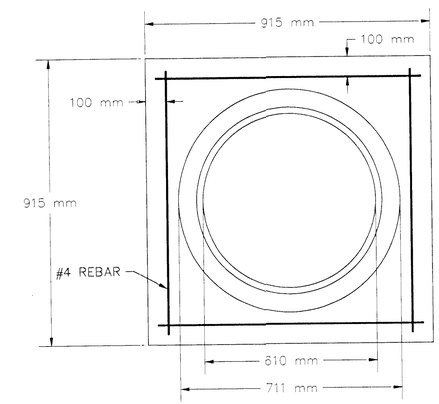

JUNCTION BOX CAP

915 mm x 915 mm x 152 mm TOP OF CAP TO BE FLUSH WITH GROUND LEVEL.

** SEE SERVICE BOX INSTALLATION FOR RING & COVER DETAILS.

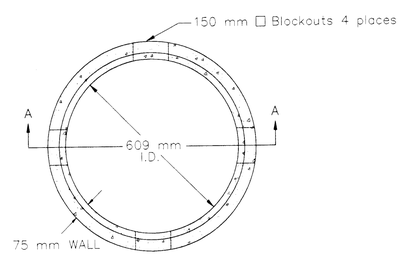

NOTES:

SERVICE & JUNCTION BOX:

1. CONDUIT CONNECTION TO BE FLUSH TO WITHIN 125 mm OF INSIDE FACE OF SIDE WALL, CONDUIT TO DRAIN INTO SERVICE BOX.
2. CONDUIT CONNECTIONS TO SERVICE BOX SHALL BE TERMINATED WITH PLASTIC CABLE BUSHING.
3. CONDUIT SHALL BE SEALED WITH APPROVED SEALER AT INSIDE WALL FACE.
4. ALL SERVICE & JUNCTION BOXES TO HAVE 200 mm OF CRUSHED ROCK.

TRENCHING:

1. DEPTH TO BE 750 mm MINIMUM WITH ROCK & STUBBLE FREE BACKFILL TO SERVE AS BEDDING MATERIAL. MAINTAIN MINIMUM CONDUIT DEPTH IN TRENCH.
2. BACKFILL TO BE COMPACTED IN 150 mm LOOSE LIFTS BY HAND OR MECHANICAL TAMPING TO A 95% STANDARD DENSITY.

CONDUIT:

1. SLOPE CONDUIT TO DRAIN AS DIRECTED BY THE ENGINEER.
2. 75 mm RIGID STEEL CONDUIT BTWN. SERVICE BOXES.
   32 mm " " " BTWN. SERVICE & JUNCTION BOXES.
   19 mm " " " BTWN. JUNCTION BOXES.
   19 mm " " " BTWN. JUNCTION BOX & DETECTOR LOOP SAW CUT

CONDUIT/DETECTOR WIRE INSTALLATION DETAILS

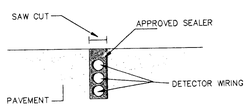

STD. CURB & GUTTER

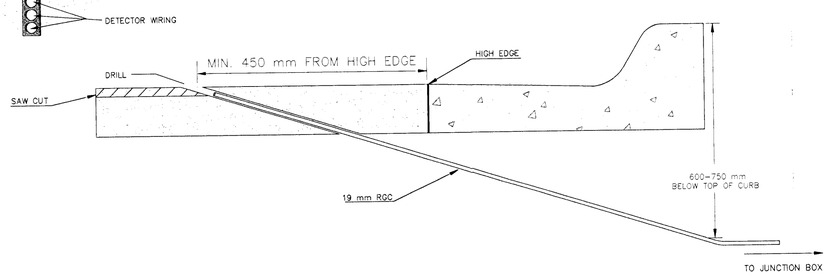

REV. DATE	COMMENTS	INT

PROJECT NUMBER				
472 - 82906				
DESIGN STAFF	DRAWN SONNY	APPROVED JFB	DATE NOV 98	SCALE NONE

PROJ NUMBER 95 05 E026 DIRECTORY CENTZOO SHEET NAME SB1-M

CENTRAL AVENUE
SIGNALIZATION DETAILS
WEST STREET TO MCLEAN BLVD

BAUGHMAN COMPANY P.A.
ENGINEERING, SURVEYING, & PLANNING
316-262-7271 • 315 ELLIS • WICHITA, KANSAS 67211

SHEET 146 OF 202