| PROJECT NO. | SHEET NO. | TOTAL SHEETS |
|---|---|---|
| | | |

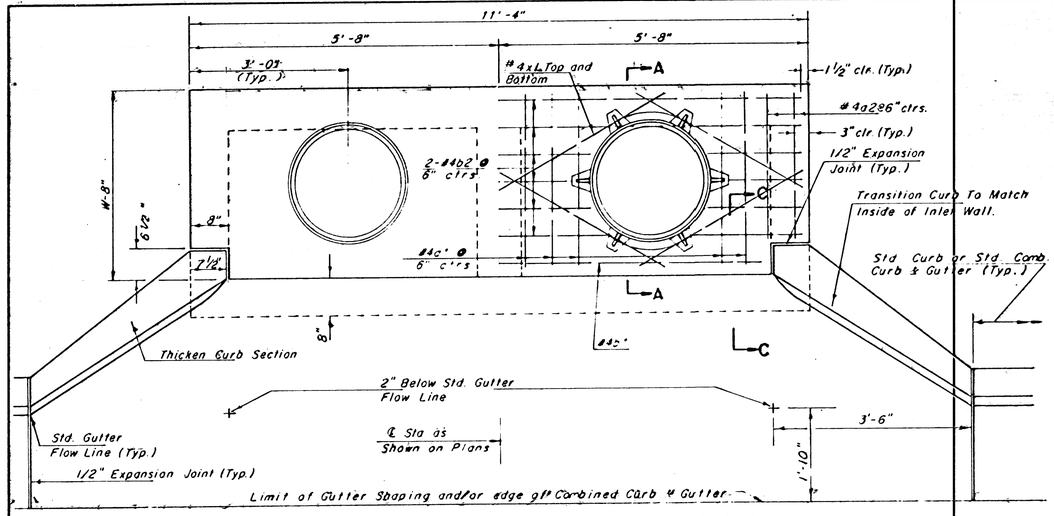


SLAB REINFORCING NOT SHOWN

SHOWING SLAB REINFORCING

NOTE Expansion Joint only in Curb Area with Conc. Pavement.

## PLAN

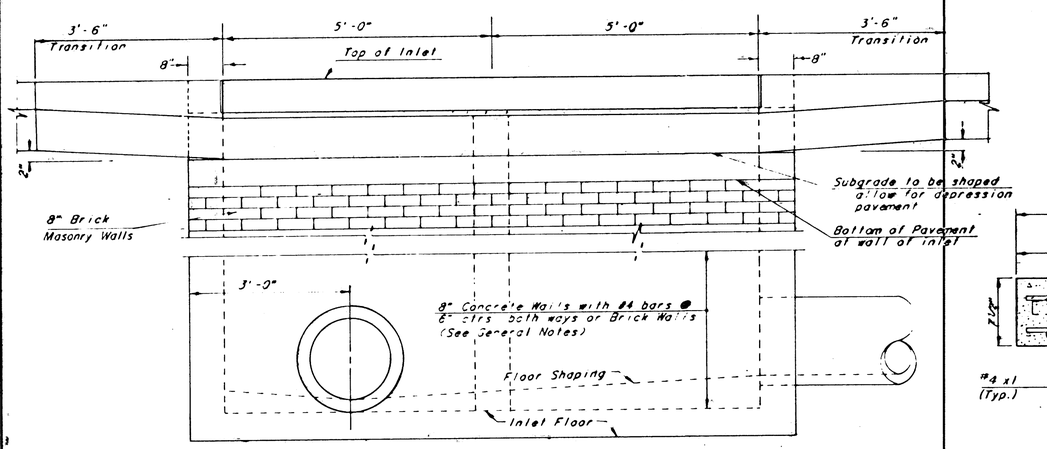


## ELEVATION

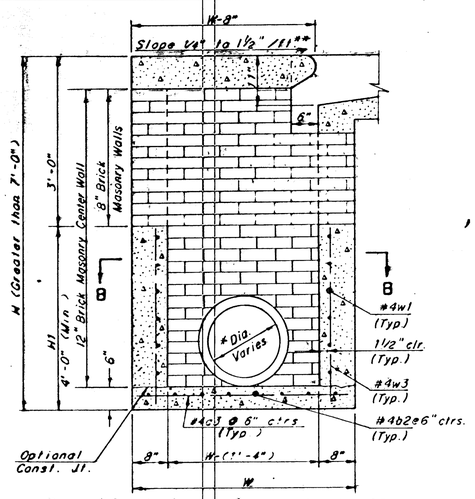


## TYPICAL INLET SECTION AT CENTER WALL

(REINFORCED CONCRETE WALLS)

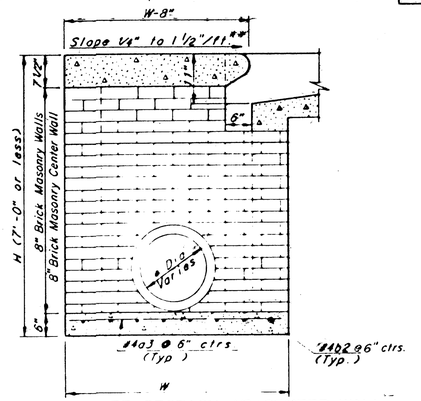


## TYPICAL INLET SECTION AT CENTER WALL

(MASONRY WALLS)

*A center wall opening shall be provided by means of a section of reinforced concrete pipe. See Case I and Case II Below.

**NOTE: Slope of Inlet Tops to match Sidewalk or Parking Slopes within Limits indicated.

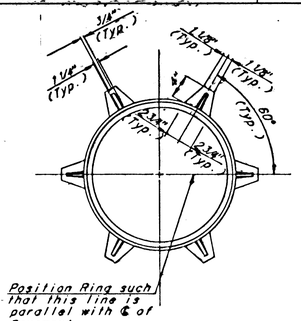


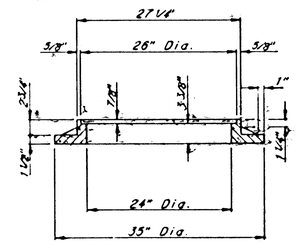


## CAST IRON INLET RING

Wt.=180 lbs.

See City of Wichita Standard Manhole Frame and Cover Detail Sheet for Cover Details to be used with Inlet Frame.

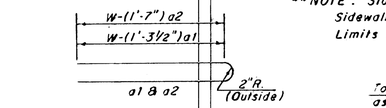


## BENDING DIAGRAM

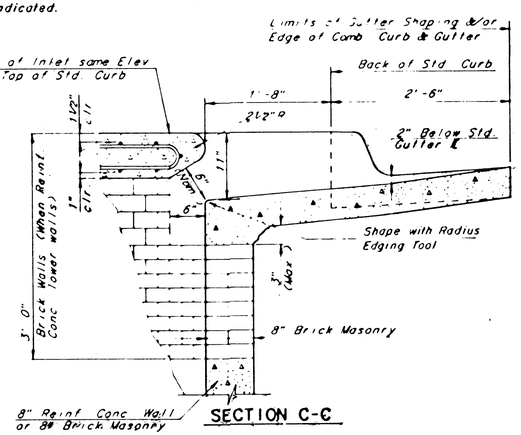


## SECTION C-C

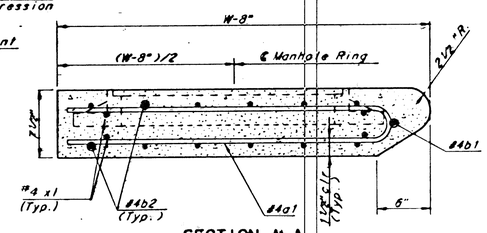


## SECTION A-A

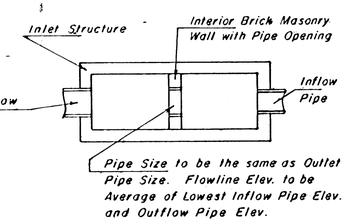


## CASE I

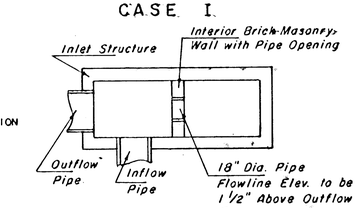


## CASE II

NOTE Center Wall Pipe Size shall be as Specified in Inlet Construction Note on the Plan/Profile Sheets for those Cases not shown here.

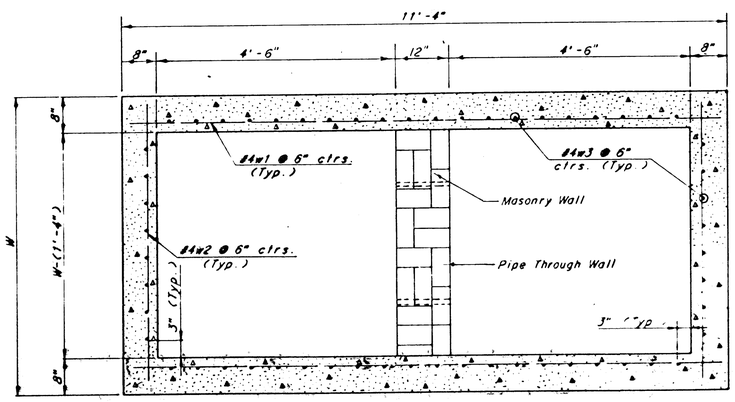


## SECTION B-B

## SLAB AND FLOOR REINFORCING

| | | W=4'-4" | | W=5'-4" | | W=6'-4" | | W=7'-4" | | W=8'-4" | |
|---|---|---|---|---|---|---|---|---|---|---|---|
| MARK | SIZE | NO. | LENGTH | NO. | LENGTH | NO. | LENGTH | NO. | LENGTH | NO. | LENGTH |
| #a1 | #4 | 13 | 6'-7" | 13 | 8'-7" | 13 | 10'-7" | 13 | 12'-7" | 13 | 14'-7" |
| a2 | #4 | 4 | 6'-0" | 4 | 8'-0" | 4 | 10'-0" | 4 | 12'-0" | 4 | 14'-0" |
| a3 | #4 | 23 | 4'-1" | 23 | 5'-1" | 23 | 6'-1" | 23 | 7'-1" | 23 | 8'-1" |
| b1 | #4 | 1 | 9'-9" | 1 | 9'-9" | 1 | 9'-9 | 1 | 9'-9" | 1 | 9'-9" |
| #b2 | #4 | 23 | 11'-1" | 29 | 11'-1" | 35 | 11'-1" | 41 | 11'-1" | 47 | 11'-1" |
| x1 | #4 | 16 | 3'-10" | 16 | 4'-2" | 16 | 4'-6" | 16 | 4'-10" | 16 | 5'-2" |

## WALL REINFORCING

| | | W=4'-4" | | W=5'-4" | | W=6'-4" | | W=7'-4" | | W=8'-4" | |
|---|---|---|---|---|---|---|---|---|---|---|---|
| MARK | SIZE | NO. | LENGTH | NO. | LENGTH | NO. | LENGTH | NO. | LENGTH | NO. | LENGTH |
| w1 | #4 | ① | 11'-1" | ① | 11'-1" | ① | 11'-1" | ① | 11'-1" | ① | 11'-1" |
| w2 | #4 | ① | 4'-1" | ① | 5'-1" | ① | 6'-1" | ① | 7'-1" | ① | 8'-1" |
| w3 | #4 | 52 | ② | 56 | ② | 60 | ② | 64 | ② | 68 | ② |

* Field bend or cut Reinforcing as required for clearance

① 4(H1-12") (H1-12") Rounded down to nearest 0.5'

② H1-3"

## GENERAL NOTES

1. THE CONTRACTOR SHALL BE REQUIRED TO CONSTRUCT 8" BRICK MASONRY WALLS BETWEEN THE CONCRETE INLET BASE AND TOP ON THIS INLET WHEN W=6'-4" OR LESS AND H=7'-0" OR LESS. WHEN W IS GREATER THAN 6'-4" AND H IS LESS THAN 7'-0", THE OUTSIDE INLET WALLS BELOW THE BRICK STACK SHALL BE REINFORCED CONCRETE CONSTRUCTION AND THE CENTER WALL SHALL BE OF MASONRY CONSTRUCTION AS SHOWN FOR THE MASONRY WALL OPTION.
2. INLET INVERT SHALL BE SHAPED WITH 8 SACK SAND MIX CONCRETE TO CREATE FLOW CHANNELS AND TO INCREASE HYDRAULIC EFFICIENCY SUCH THAT THE INLET WILL BE SELF CLEANING BETWEEN ALL INLET AND/OR OUTLET PIPES.
3. CONCRETE TOPS TO BE INSTALLED ON THIN MORTAR CUSHION TO INSURE FULL SUPPORT ALONG BRICK WALLS. CONCRETE TOPS MAY BE CAST IN PLACE OR PRECAST. CONCRETE USED FOR INLET CONSTRUCTION SHALL BE CONCRETE PAVEMENT MIX.
4. INLET TOP REINFORCING SHALL BE SPACED ON 6" MAX. CENTERS. INLET LIDS SHALL BE NOTCHED OUT AS INDICATED TO FACILITATE CONSTRUCTION OF CURB. BARS IN INLET TOP TO BE FIELD BENT OR CUT TO CLEAR MANHOLE RING.
5. THE ENDS OF ALL PIPES INSTALLED IN INLETS SHALL BE CUT OFF FLUSH WITH THE INSIDE FACE OF THE INLET WALL.

| STANDARD CURB INLET PRECAST TOPS | | | |
|---|---|---|---|
| W | PRE-CAST TOP SIZE | SIDE OR INTERIOR WALL PIPE SIZE | CU. YD. CONC. |
| 4'-4" | 3'-8" x 11'-4" x 7 1/2" | 21" & SMALLER | 0.83 ± |
| 5'-4" | 4'-8" x 11'-4" x 7 1/2" | 24" & 30" | 1.09 ± |
| 6'-4" | 5'-8" x 11'-4" x 7 1/2" | 36" & 42" | 1.35 ± |
| 7'-4" | 6'-8" x 11'-4" x 7 1/2" | 48" & 54" | 1.61 ± |
| 8'-4" | 7'-8" x 11'-4" x 7 1/2" | 60" & 66" | 1.87 ± |

~~REVISED 12-5-88~~ Revised 2-16-89 ~~REVISED 12-21-84~~

# STANDARD TYPE 1A CURB INLET

INLET OPENING = 6" x 10'-0"

WICHITA, KANSAS

| | | | |
|---|---|---|---|
| Designed by | BER, KJS, LMB | Checked by | LMB |
| Drawn by | JCP | Date Nov., 1984 | Job No. |