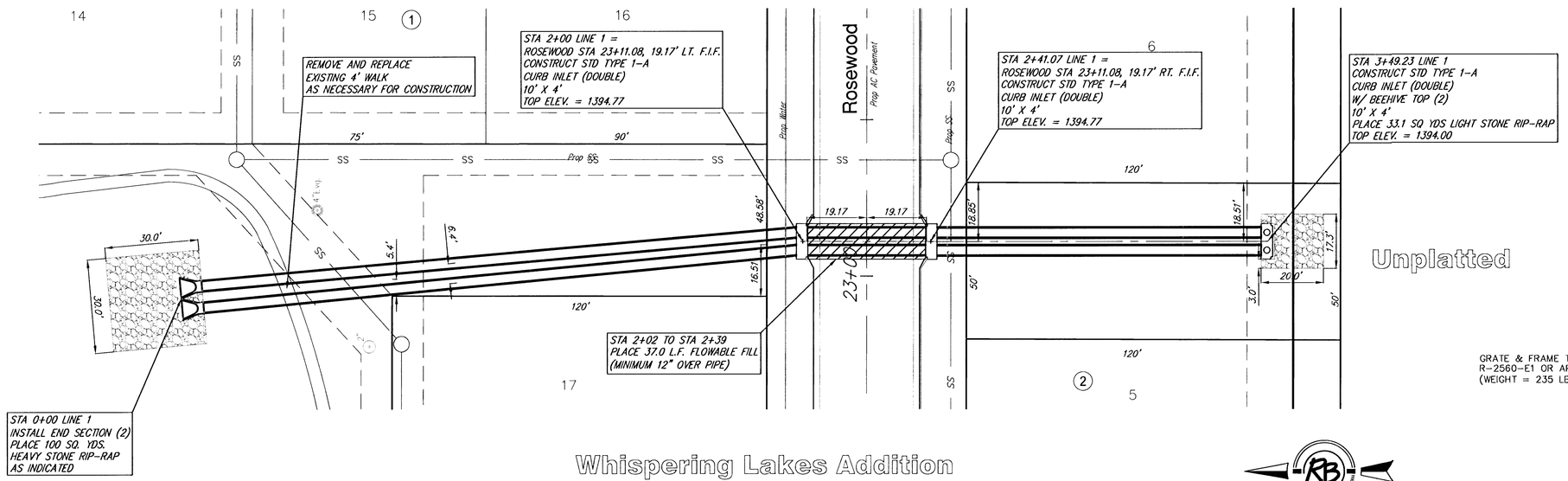

SCALE 1" = 20'

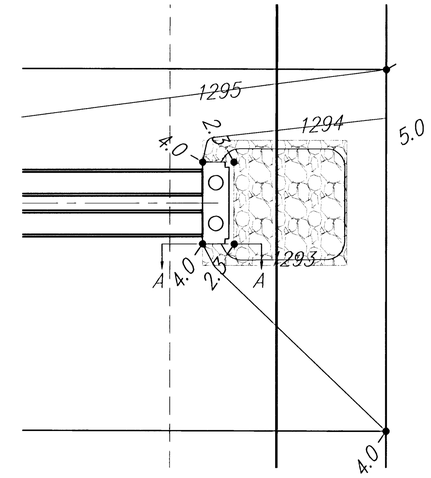

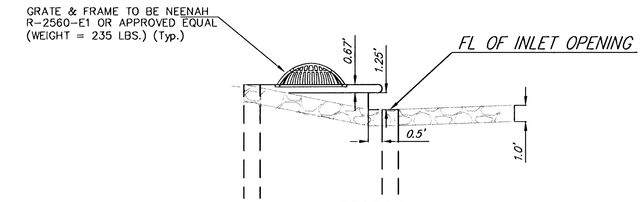

SECTION A-A

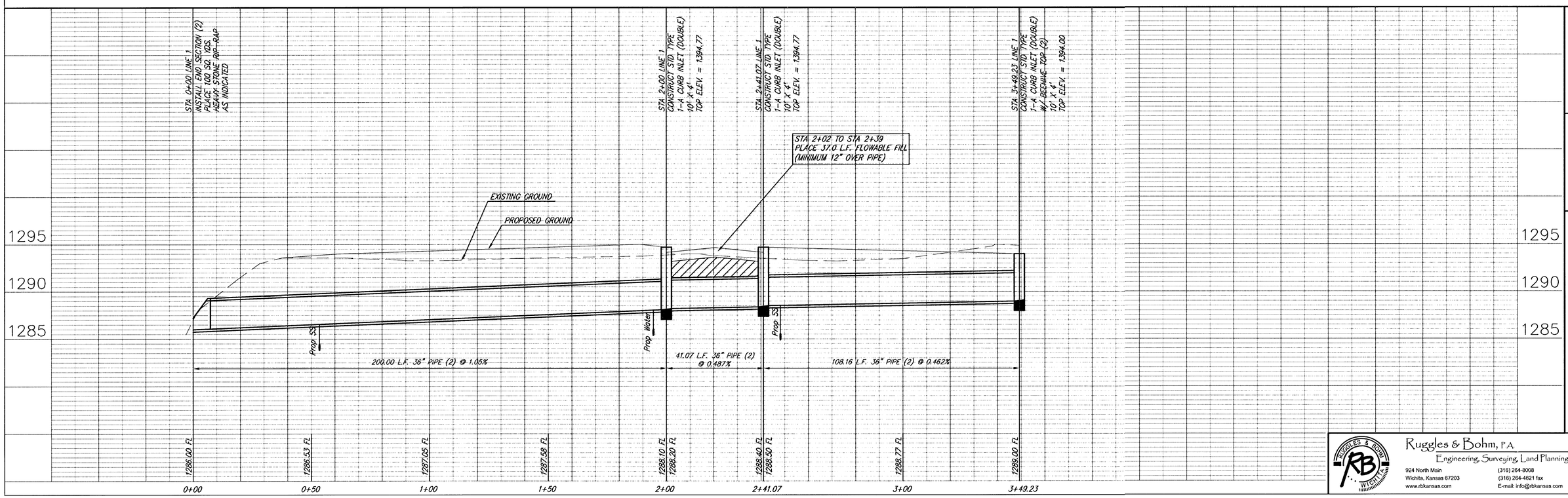

DESIGN	CMB
DRAWN	EJG
REVISED	
UTILITY	
DATE	Jan. 16, 2003
REVIEW	
PROJECT NUMBER	472-83668
DRAWING FILE	SWS {SWS 01}

Whispering Lakes Addition
Incidental Drainage
WICHITA, KANSAS

Ruggles & Bohm, P.A.
Engineering, Surveying, Land Planning
924 North Main
Wichita, Kansas 67203
www.rbkansas.com
(316) 264-8008
(316) 264-4621 fax
E-mail: info@rbkansas.com

RB JOB 2211E