FHWA REG NO.	STATE	PROJECT NO.	YEAR	SHEET NO.	SHEETS
7	KANSAS	472-83784	03	3	15

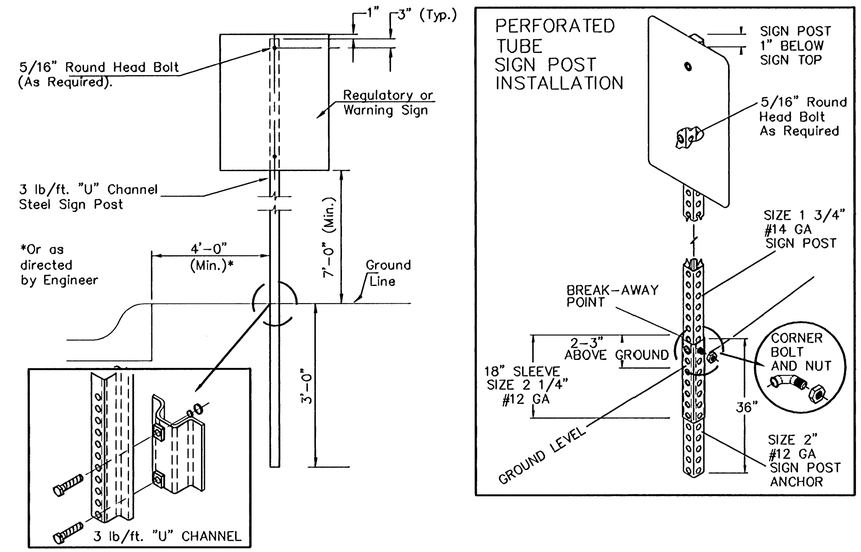

TYPICAL TRAFFIC CONTROL SIGN MOUNTING INSTALLATION

CURB AND GUTTER SECTION

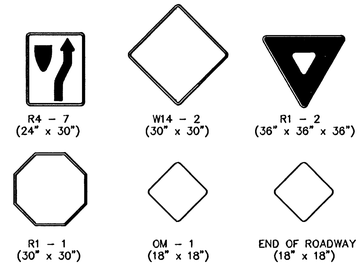

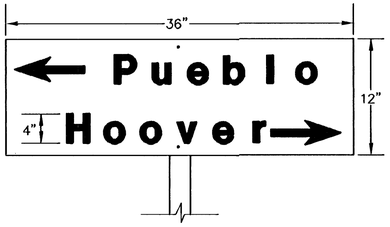

FLAT PLATE STREET NAME SIGN

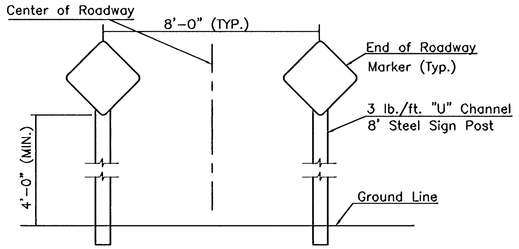

TYPICAL END OF ROADWAY SIGN MOUNTING INSTALLATION

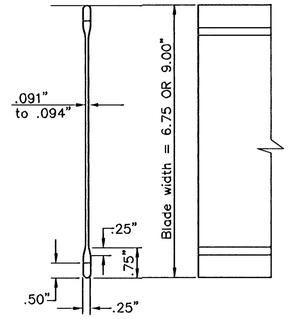

STREET NAME SIGN

BLADE DETAILS

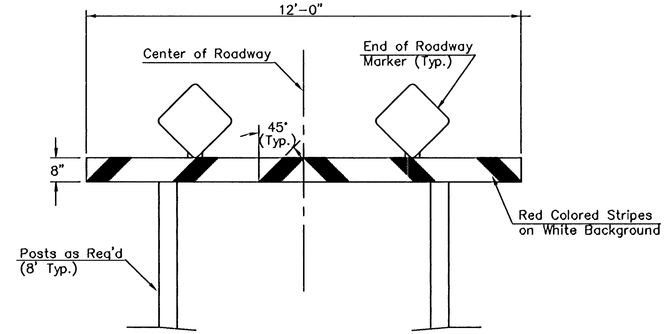

TYPE I BARRICADE DETAIL W/ E.O.R. MARKERS

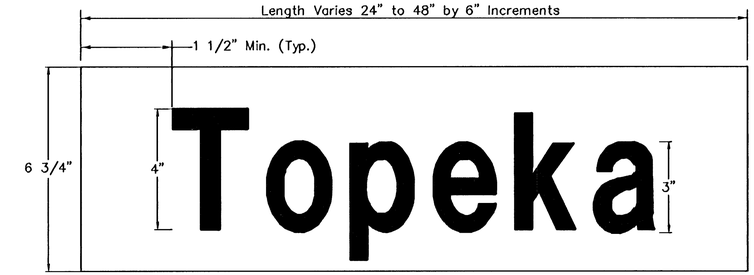

DETAIL A
6 3/4" STANDARD

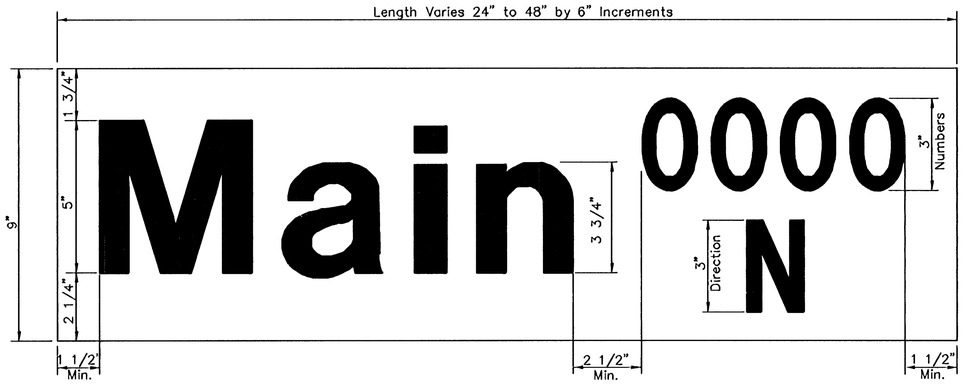

DETAIL B
9" METRO

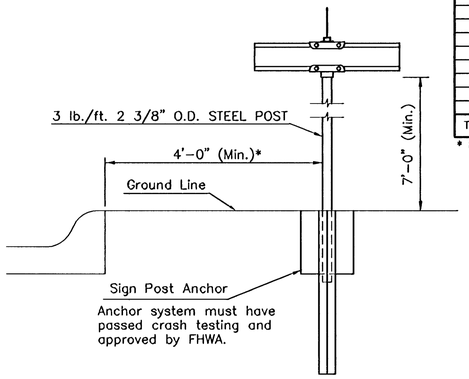

TYPICAL STREET NAME SIGN MOUNTING INSTALLATION

CURB AND GUTTER SECTION

SIGN ASSEMBLY TABLE

STATION	OFFSET	SIGN	QUANTITY*
7+92 (BL#1)	0' RT	EOR	1
17+30 (BL#1)	7.72' LT	R4-7&OM-1	1
18+21.15 (BL#1)	18' LT	R4-7&OM-1	1