STANDARD WHEELCHAIR RAMP CONSTRUCTION DETAIL FOR STREETS WITH COMBINED CURB & GUTTER (TYPE A)

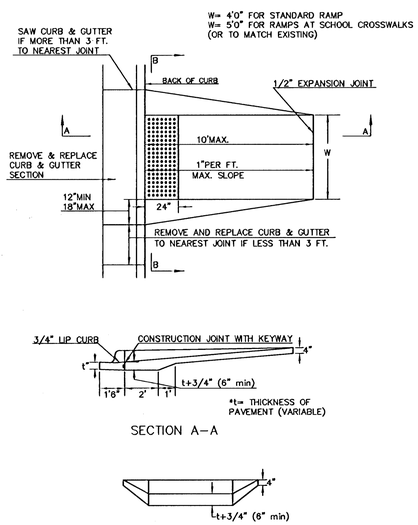

STANDARD WHEELCHAIR RAMP CONSTRUCTION DETAIL FOR CONCRETE STREETS WITH MONOLITHIC CURB (TYPE A)

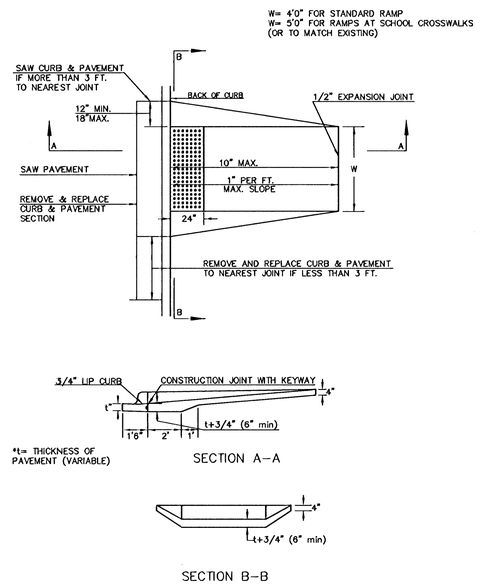

STANDARD WHEELCHAIR RAMP CONSTRUCTION DETAIL FOR STREETS WITH COMBINED CURB & GUTTER AND FULL WALK (TYPE B)

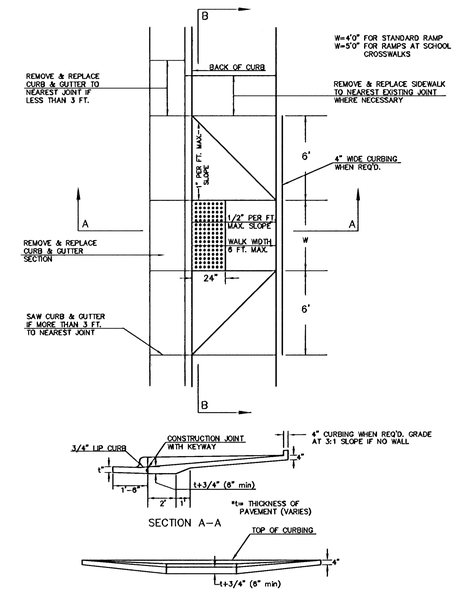

STANDARD WHEELCHAIR RAMP CONSTRUCTION DETAIL FOR STREETS WITH MONOLITHIC CURB AND FULL WALK (TYPE B)

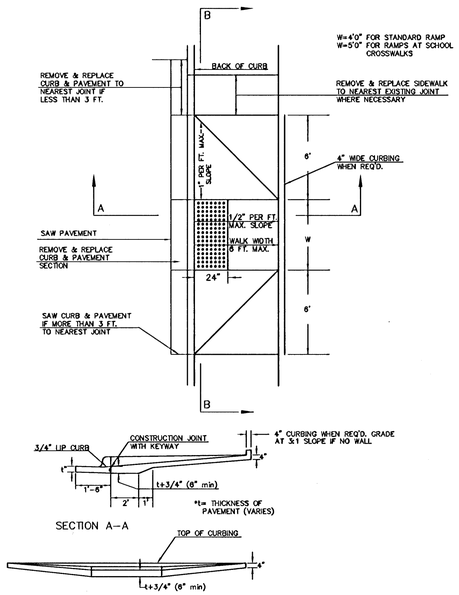

STANDARD WHEELCHAIR RAMP CONSTRUCTION DEAIL FOR STREET WITH COMBINED CURB AND GUTTER ON RADIUS WITH 6'± FROM BACK OF CURB TO PROPERTY CORNER (TYPE C)

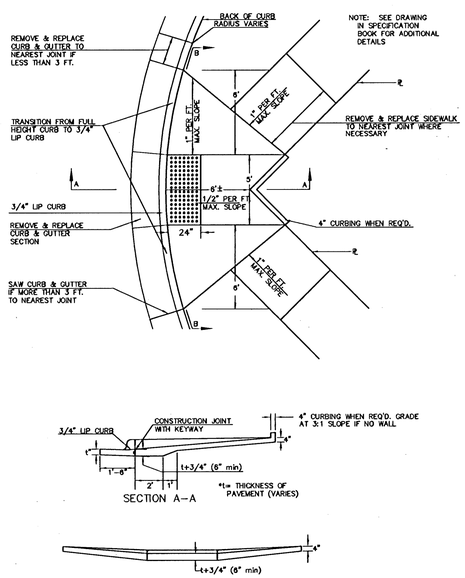

STANDARD WHEELCHAIR RAMP CONSTRUCTION DETAIL FOR STREET WITH MONOLITHIC CURB ON RADIUS WITH 6'± FROM BACK OF CURB TO PROPERTY CORNER (TYPE C)

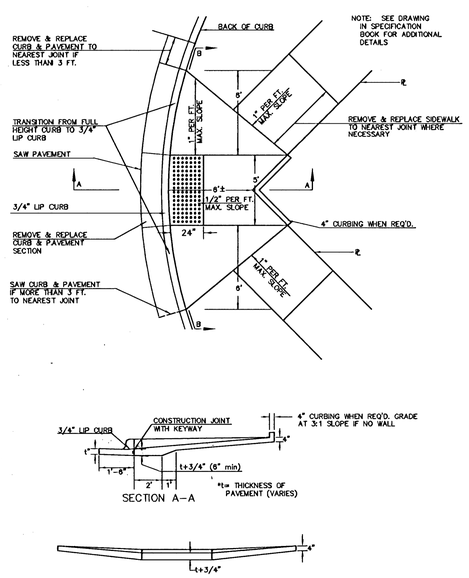

STANDARD WHEELCHAIR RAMP CONSTRUCTION DETAIL FOR STREETS WITH COMBINED CURB & GUTTER WITH ONE FULL SIDEWALK (TYPE D)

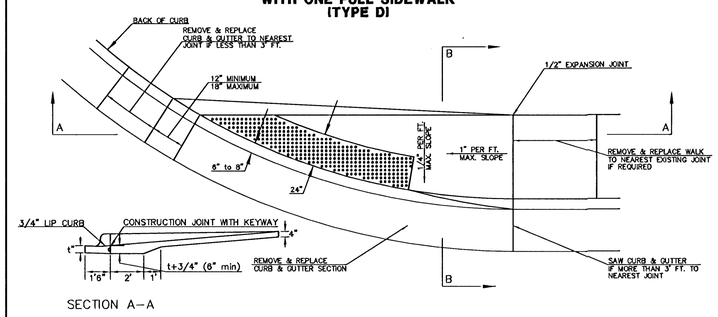

STANDARD WHEELCHAIR RAMP CONSTRUCTION DETAIL FOR STREETS WITH MONOLITHIC CURB WITH ONE FULL SIDEWALK (TYPE D)

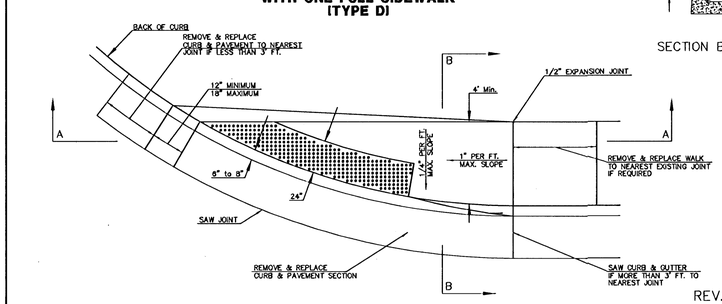

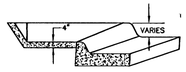

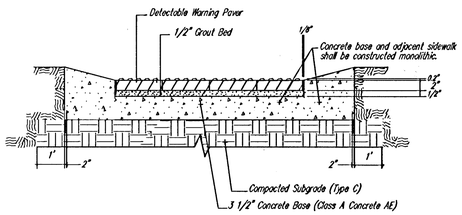

TYPICAL SECTION DETECTABLE WARNING PAVER
SECTION A-A

NOTE: HANOVER DETECTABLE WARNING PAVERS (OR AN APPROVED ALTERNATE) SHALL BE USED IN ALL WHEELCHAIR RAMPS. THE 11 3/4" RED 15' PAVER SHALL BE USED IN ALL APPLICATIONS.
HANOVER ARCHITECTURAL PRODUCTS
240 BENDER ROAD
HANOVER, PA 17331
1-717-637-0500
www.hanoverpavers.com

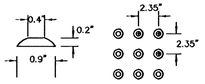

DOME DETAIL

WHEEL CHAIR RAMP.DWG

REV. 7-21-03

G:\CIVIL\99118\DWG\PAV\ENT_PH1\99118ED5.DWG

CITY OF WICHITA
PUBLIC WORKS
ENGINEERING

WHEELCHAIR RAMP DETAILS

CITY ENGINEER
NEIL CABLE, P.E.

PROJECT NUMBER	OCA NUMBER	DATE
XXX-XXXXX	XXXXXX	MM/YY

CITY ENGINEER'S OFFICE
CITY HALL – SEVENTH FLOOR
455 NORTH MAIN STREET
WICHITA, KANSAS 67202-1620
(316) 268-4501
(316) 268-4114 FAX

DESIGN	DRAWN
ABC	DEF

SHEET
5 OF 15