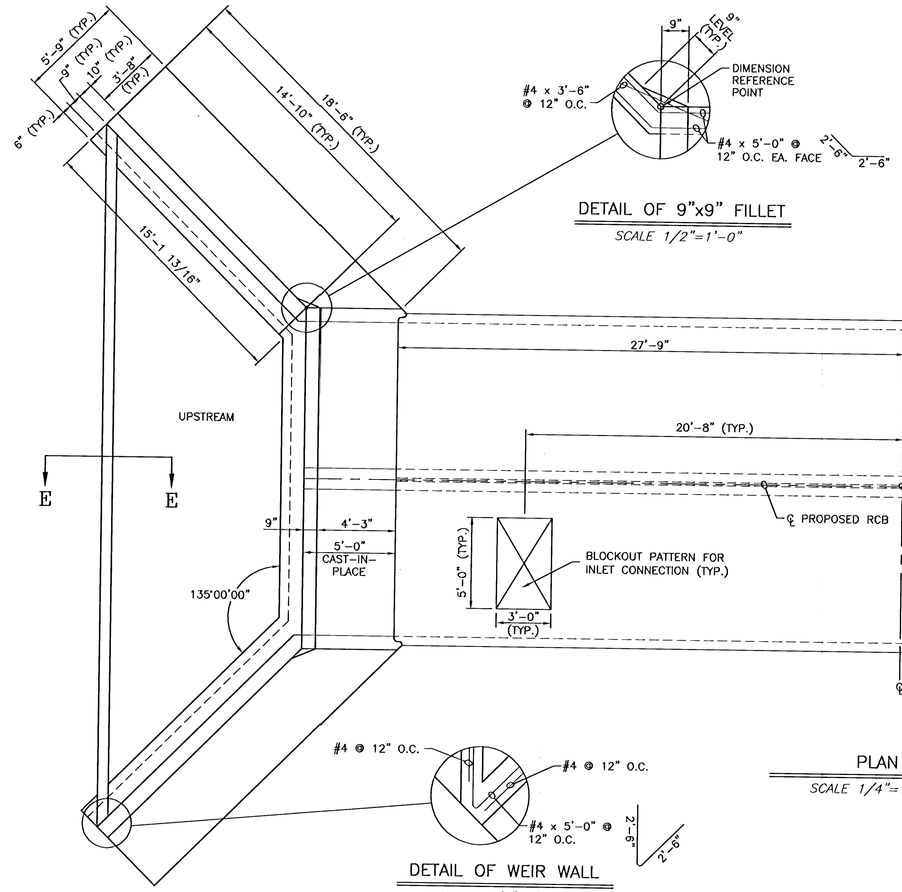

DETAIL OF 9"x9" FILLET

SCALE 1/2"=1'-0"

DETAIL OF WEIR WALL

SCALE 1/2"=1'-0"

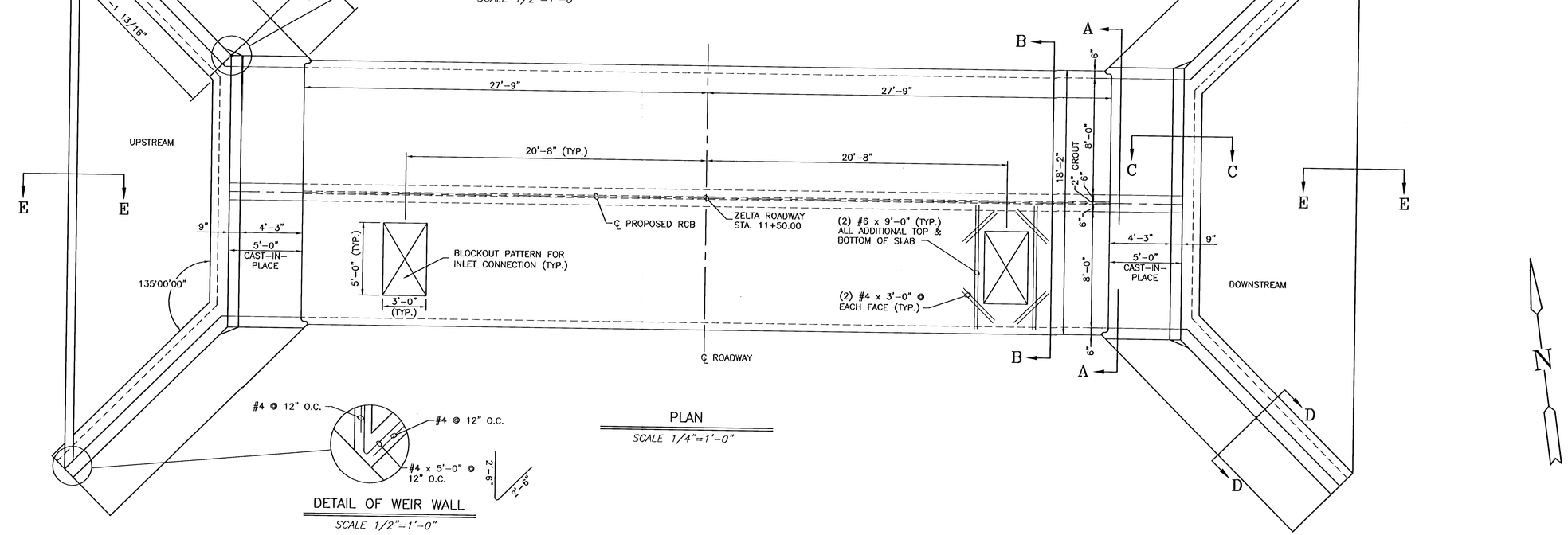

PLAN

SCALE 1/4"=1'-0"

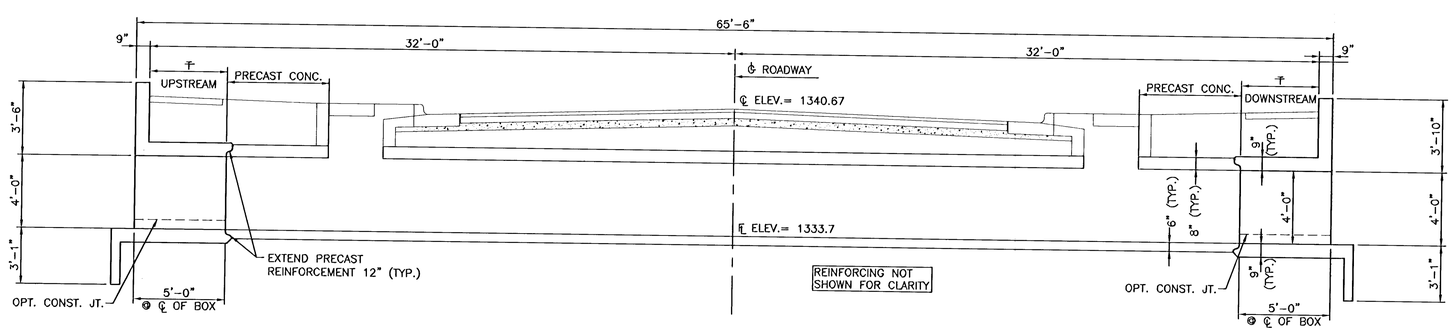

⊤ HAND COMPACTION EQUIP. ONLY IN THIS AREA.

SECTION AND ELEVATION

(Normal to È Roadway @ STA 26+25.00)

SCALE 1/4"=1'-0"

H:\CIVIL\95058\02172\DWG\SWS\ZELTA\RCB\02172D05

MKEC ENGINEERING CONSULTANTS
411 N. WEBB ROAD
WICHITA, KS. 67206
316 - 684 - 9600

WOODLAND LAKES ESTATES THIRD ADDITION - ZELTA PHASE
PROJECT NAME

8'X4' RCB DETAILS
SHEET TITLE

DK	JAS/DMU	ASH
DESIGN BY:	DRAWN BY:	CHECKED BY:
JUNE 2003	02172	12 / 32
DATE	JOB NO.	SHEET/OF