BENCHMARKS:
City of Wichita Disc, SE corner of 29th & Tyler
32.30 ft South of centerline
30.00 ft East of centerline
9.20 ft Southeast of power pole
43.20 ft Southeast of section corner
Elev. = 178.04 (City Datum)

"□" Cut in top of curb on the West side of Pepper Ridge 65± south of Lot 8, Blk. B, Fossil Rim Estates.
Elev. = 174.92 (City Datum)

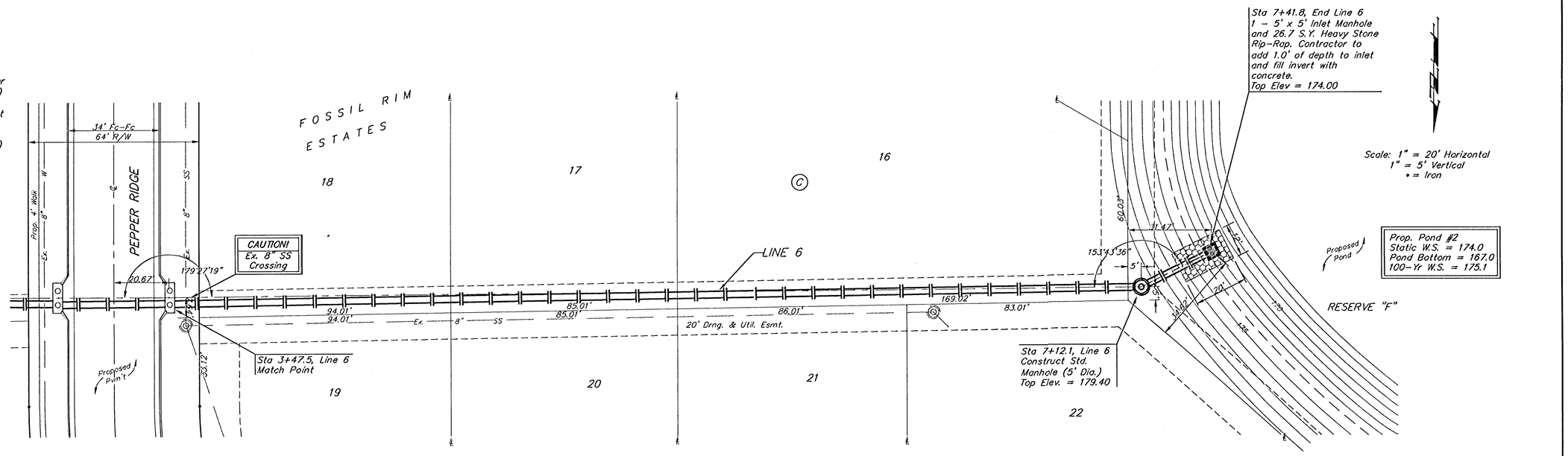

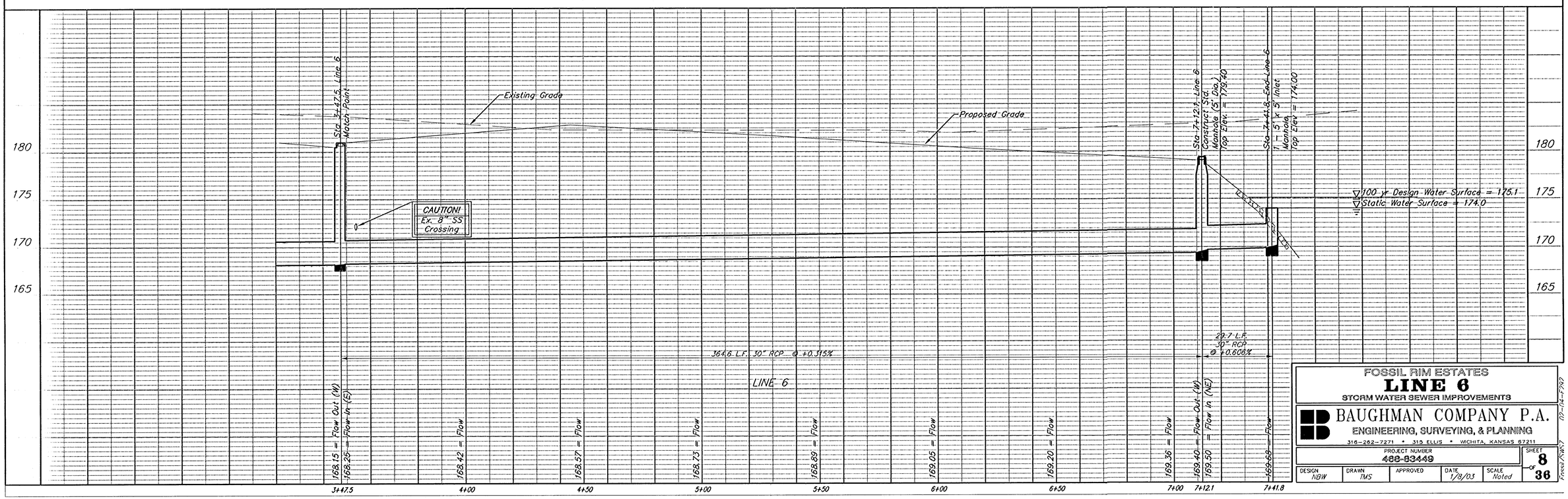

FOSSIL RIM ESTATES
LINE 6
STORM WATER SEWER IMPROVEMENTS

BAUGHMAN COMPANY P.A.
ENGINEERING, SURVEYING, & PLANNING
316-262-7271 • 315 ELLIS • WICHITA, KANSAS 67211

PROJECT NUMBER	DESIGN	DRAWN	APPROVED	DATE	SCALE	SHEET
488-83449	NBW	TMS		1/8/03	Noted	8 OF 36

02-04-F/RP
Fossil/FNW7